Technical data:
Flow of the valves.

%

from page 2.1.1

15 mm directly operated solenoid valves

from page 2.2.1

Electrically and pneumatically operated valves, size 15 mm.

from page 2.10.1

Electrically and pneumatically operated valves, size 18 mm.

from page 2.30.1

Electrically and pneumatically operated valves 1/8".

from page 2.50.1

Electrically and pneumatically operated valves 1/4"

from page 2.70.1

NAMUR solenoid valves 1/4"

from page 2.88.1

Electrically and pneumatically operated valves 1/2"

from page 2.90.1

Electrically and pneumatically operated valves ISO 1

from page 2.110.1

Electrically and pneumatically operated valves ISO 2

from page 2.130.1

Indirectly operated solenoid valves for water and steam

from page 2.165.1

Integrated circuits

from page 2.170.1

Coils

from page 2.200.1

Connectors

from page 2.210.1

Manually operated valves 1/8"

from page 2.230.1

Manually operated valves 1/4"

from page 2.236.1

Foot valves

from page 2.250.1

Microvalves ø 4 and manual operating devices

from page 2.255.1

Mechanically operated valves ø 4

from page 2.270.1

Mechanically operated valves 1/8"

from page 2.275.1

Slide valves

from page 2.300.1

Ball valves

from page 2.310.1

Quick exhaust valves

from page 2.360.1

Uni-directional, safety and piloted stop valves

from page 2.370.1

Actuators

from page 2.430.1

Ball valves with actuators

from page 2.431.1

Limit switch box

from page 2.431.30

Handweel manipulator

from page 2.432.1

Flow of the valves:

The quantity of compressed air that can flow through the valve depends on the size of the orifices and the type of course that must be followed within the valve itself by the fluid under pressure. The flow of a valve is measured using suitable measuring circuits with the hypothesis that the upstream pressure is constant and that quantity of air required downstream is variable.

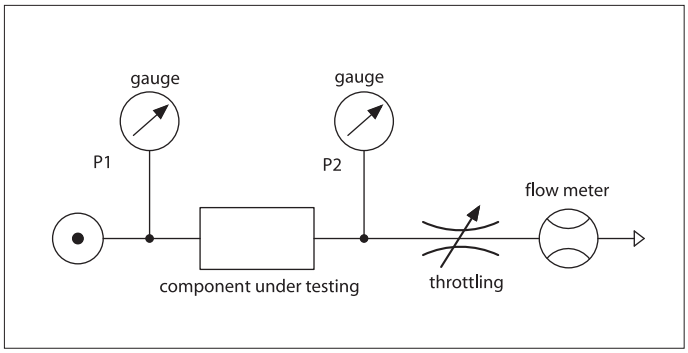

Curves known as "**FLOW CHARACTERISTICS**" are drawn, which indicate how the flow of the valve varies with the variation in downstream pressure, with a constant pressure supply. **Once these characteristics are known, the flow of the valve is also known in all working conditions.**
These curves show how the study model adopted for a valve - which consists of comparing it with a converging nozzle that releases a compressible gas with constant upstream pressure - is reasonably valid. Indeed, according to this model, the flow that passes through the nozzle depends on the following factors: the upstream pressure, the difference in pressure **Δp** and the valvular coefficient **Kv.**
The coefficient **Kv** summarizes the characteristics of the internal passages of the valve and is represented by the **"number of litres of water that flow through the valve in one minute, in normal conditions (atmospheric pressure, 20 °C) in the presence of a fall in pressure Δp [AS1]= 1 bar.**

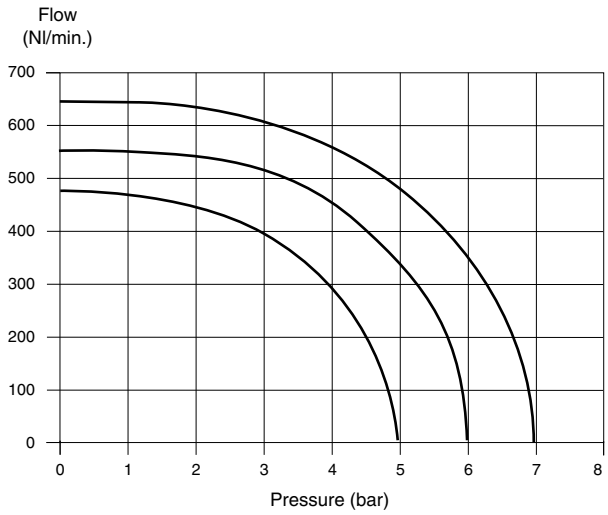

The following formula constitutes the relationship between all the aforementioned elements:

$$Q = 28{,}3\ Kv \sqrt{\Delta p\ (p1 - \Delta p)}$$ where

Q = flow [nl/min]
Kv = valvular coefficient of the H2O valve [nl/min]
Δp = p1 - p2 = fall in pressure between upstream and downstream [bar]
p1 = absolute pressure upstream [bar]
28,3 = conversion coefficient from water to air

So: the capacities calculated with the given formula differ little from those that can be obtained from the flow characteristic of the corresponding valve.
Furthermore, it also provides confirmation, from the characteristic itself, of the limits of validity of the formula.
It is only valid for Δp < **Ω** p1; i.e. only up until the fall of pressure across the valve reaches a value equivalent to half the absolute supply pressure.

In this condition the air reaches max. velocity (critical velocity **Vc**) and consequently maximum capacity **Qmax**.
For Δp < **Ω** p1, the pressure energy is converted into kinetic energy with an increase in velocity and consequently capacity. For Δp < **Ω** p1, the extra pressure energy is no longer converted into velocity energy, but dissipated in local turbulences in the form of heat.

All of this is confirmed by the flow characteristics.
From the same characteristics it is possible to discover that that the value of the flow with Δp = 1 bar is ≅ 2/3 Qmax.
The capacity corresponding to Δp = 1 bar is defined **"NOMINAL FLOW Qn".**
In the case of a valve, a different flow characteristic exists for each absolute supply pressure, and thus corresponding values for Qmax. and Qn.
Falls in pressure of Δp > 1 bar are too economically onerous, and for this reason it is advisable to limit the falls in pressure to Δp = 0,5 bar, by choosing a larger size valve.

In the catalogue reference is normally made to the nominal flow, but the flow characteristics and the valvular coefficient are also provided.
Let's calculate, for example, the flow of a valve with Kv = 12 NL/min, P_1 = 6 bar,

ΔP = 0,5 bar Q = $28{,}3 * 12 \sqrt{0{,}5\ (7-0{,}5)}$ = 612 [Nl/min]
Qn = 831 [Nl/min]
Q max = 1118 [Nl/min]

15 mm directly operated solenoid valves

3/2, normally open and normally closed

Executions			
Version	Symbol	Code	Item
3/2, N. C. 12 V DC	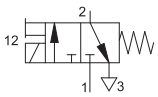	034601	AE05C01200
3/2, N. C. 24 V DC		034602	AE05C02400
3/2, N. C. 24 V AC		034603	AE05C02450
3/2, N. C. 110 V AC		034604	AE05C11050
3/2, N. C. 230 V AC		034605	AE05C22050
3/2, N. A. 12 V DC	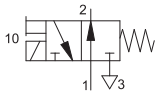	034611	AE05A01200
3/2, N. A. 24 V DC		034612	AE05A02400
3/2, N. A. 24 V AC		034613	AE05A02450
3/2, N. A. 110V AC		034614	AE05A11050
3/2, N. A. 230 V AC		034615	AE05A22050

Series of directly operated poppet valves for single or manifold sub-bases, standard with coil and without connector.
The single base is M5 threaded.
The manifold bases can be supplied with M5 ports or with integral 4 mm push-in fitting.
For sub-bases see page 2.2.2.
For the connectors type A19207.. see page 2.210.10.

Note: The maximum couple of locking of M3 screws must not exceed 0,5 Nm.
(The locking screws are included together with the valve).

Technical data		
Fluid	Compressed filtered air with or without lubrication	
Pressure range	Normally closed: 0 ÷ 10 bar	Normally open 0 ÷ 8 bar
Temperature range	-15 °C ÷ + 50°C	
Orifice	Normally closed: 1,2 mm	Normally open: 1 mm
Nominal flow at 6 bar	Normally closed: 29 Nl/min	Normally open: 26 Nl/min
Manual override	Two stable position, flat	
Response time	10 ÷ 15 ms	
Mounting	In any position	
Duty cycle	ED 100%	
Voltage tolerance	± 10%	
Protection class	IP 65 (with connector already mounted)	
Electrical consumption	2,5 W	
Materials	Body: Acetal resin	
	Internal parts: Acetal resin - stainless steel	
	Seals: Nitrile rubber (NBR)	
	Screws: Zinc plated steel	

type: **AE05...**

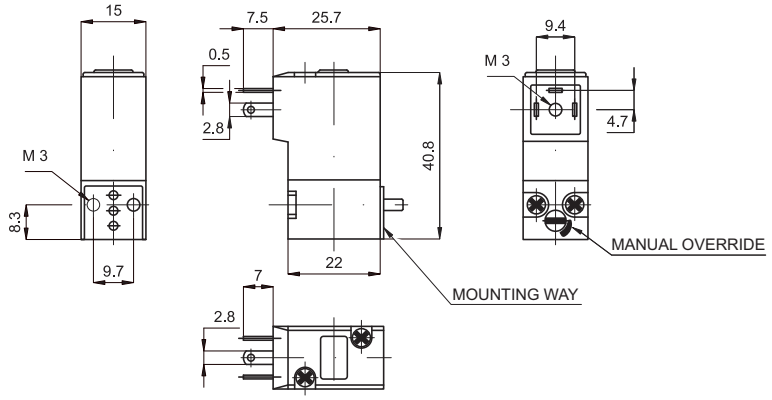

Single base — type: **ABAS05S**

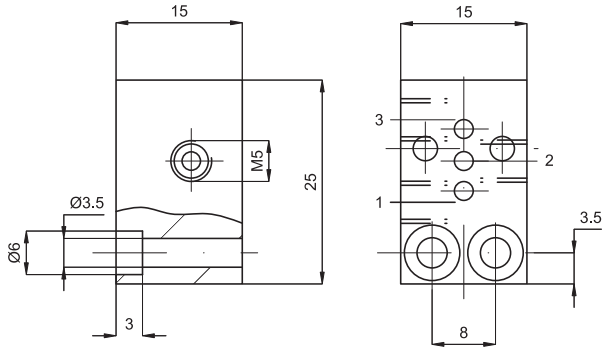

Code	Item
034621	ABAS05S

Closing plate — type: **ABAS05T**

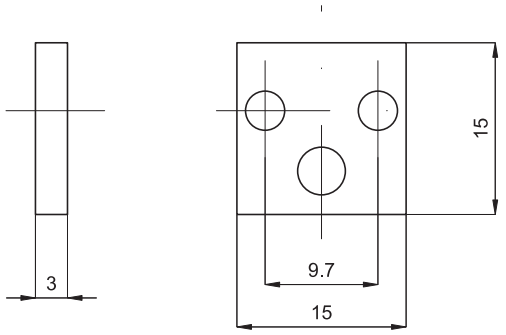

Code	Item
034622	ABAS05T

Manifold base — type: **ABAS05...**

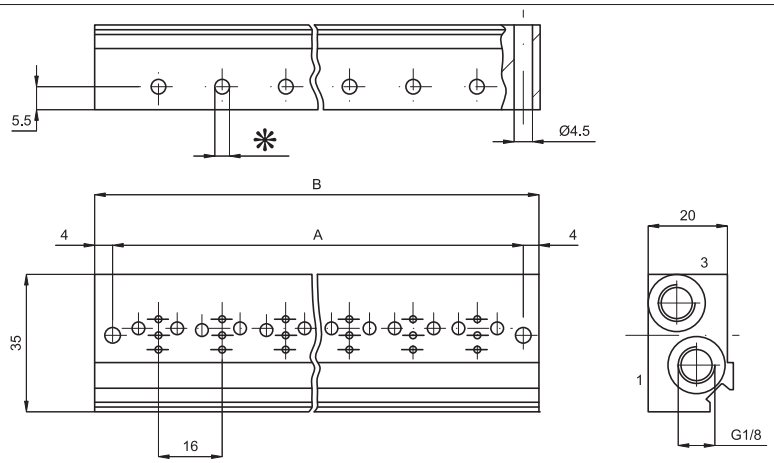

With M5 ports				With push-in fitting 4 mm tube ports					
Code	Item	Positions	k	Code	Item	Positions	k	A	B
034625	ABAS050205	2	M5	034641	ABAS050204	2	4 mm.	39	47
034626	ABAS050305	3		034642	ABAS050304	3		55	63
034627	ABAS050405	4		034643	ABAS050404	4		71	79
034628	ABAS050505	5		034644	ABAS050504	5		87	95
034629	ABAS050605	6		034645	ABAS050604	6		103	111
034630	ABAS050705	7		034646	ABAS050704	7		119	127
034631	ABAS050805	8		034647	ABAS050804	8		135	143
034632	ABAS050905	9		034648	ABAS050904	9		151	159
034633	ABAS051005	10		034649	ABAS051004	10		167	175

Size 15 mm, 5/2 electric single stable position

Executions			
Version	Symbol	Code	Item
1/8" ports	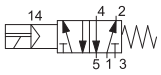	035051	AE15181520
EXTERNAL AIR PILOT			
1/8" ports	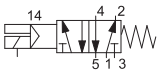	035061	AE15181520K

Note: The fixing screws for mounting on sub-base are included in the base kit.
The maximum torque of the fixing screw of the coil must not exceed 1Nm.

type: **AE15181520**
AE15181520K

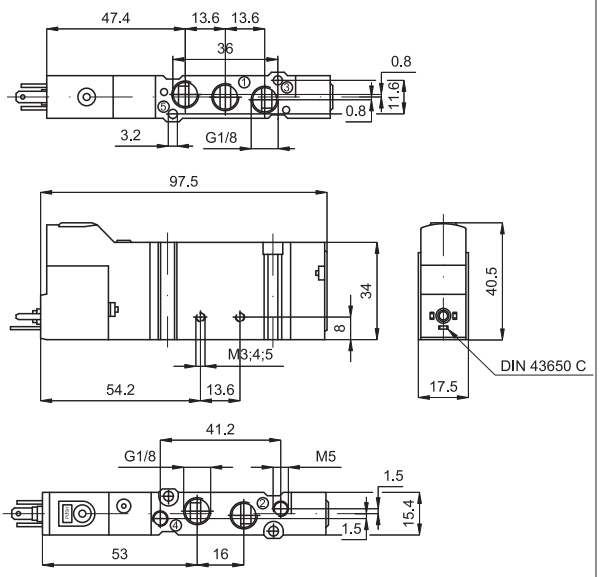

Series of spool valves with reduced dimensions and low electrical consumption, thanks to which they can be operated directly by electronic systems.
The ports are available in various configurations for mounting on base or single use; in case of single use the relevant fixing plate must be applied.
Coils and connectors are to be ordered separately.

For the fixing plate type PF 1518 see page 2.20.1.
For the coils type ASA 18.. see page 2.200.1.
For the connectors type A05207.. see page 2.210.1.
For the sub-bases type SB15.. see page 2.20.1.

In the external air pilot versions the ports for external piloting are M5.

Technical data		
Fluid	Compressed filtered air with or without lubrication. Lubrication, if be used, must be continous.	
Pressure range	2 ÷ 8 bar	With external air pilot: 0 ÷ 8 bar
Temperature range	-5 °C ÷ + 50°C	
Orifice	6 mm	
Flow	800 Nl/min	
Manual override	Single stable position, flat	
Response time	Energising: 24 ms	De-energising: 35 ms
Mounting	In any position	
Materials	Body:	Die-cast aluminium
	Heads:	Acetal resin
	Seals:	Nitrile rubber (NBR)

Electrically and pneumatically operated valves, sizes 15 and 18 mm

Size 15 mm, 5/2 electric two stable position

Executions			
Version	Symbol	Code	Item
1/8'' ports	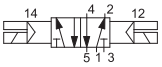	035071	AE15182520
EXTERNAL AIR PILOT			
1/8'' ports	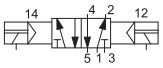	035081	AE15182520K

Note: The fixing screws for mounting on sub-base are included in the base kit.
The maximum torque of the fixing screw of the coil must not exceed 1Nm.

type: **AE15182520**
AE15182520K

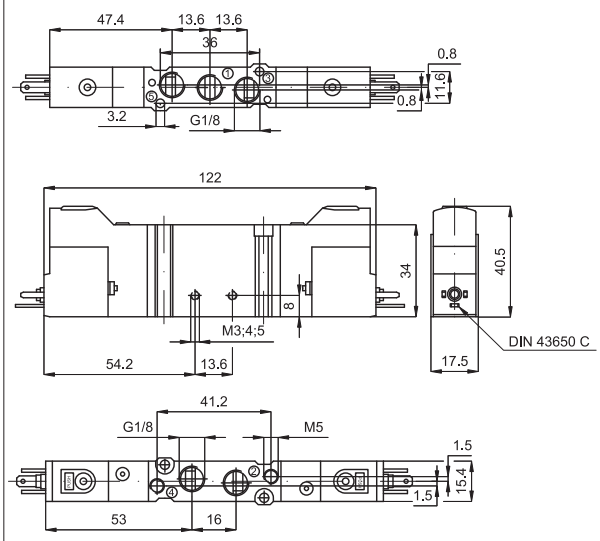

Series of spool valves with reduced dimensions and low electrical consumption, thanks to which they can be operated directly by electronic systems.
The ports are available in various configurations for mounting on base or single use; in case of single use the relevant fixing plate must be applied.
Coils and connectors are to be ordered separately.

For the fixing plate type PF 1518 see page 2.20.1.
For the coils type ASA 18.. see page 2.200.1.
For the connectors type A05207.. see page 2.210.1.
For the sub-bases type SB15.. see page 2.20.1.

In the external air pilot versions the ports for external piloting are M5.

Technical data		
Fluid	Compressed filtered air with or without lubrication. Lubrication, if be used, must be continous.	
Pressure range	2 ÷ 8 bar	With external air pilot: 0 ÷ 8 bar
Temperature range	-5 °C ÷ + 50°C	
Orifice	6 mm	
Flow	800 Nl/min	
Manual override	Single stable position, flat	
Response time	Energising: 24 ms	
Mounting	In any position	
Materials	Body:	Die-cast aluminium
	Heads:	Acetal resin
	Seals:	Nitrile rubber (NBR)

Size 15 mm, 5/3 electric

Executions			
Version	Symbol	Code	Item
1/8" ports, with closed centres		035091	AE1518253C
1/8" ports, with open centres		035094	AE1518253A
1/8" ports, pressurised centres	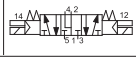	035097	AE1518253P
EXTERNAL AIR PILOT			
1/8" ports, with closed centres	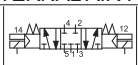	035101	AE1518253CK
1/8" ports, with open centres		035104	AE1518253AK
1/8" ports, pressurised centres	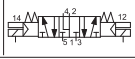	035107	AE1518253PK

Note: The fixing screws for mounting on sub-base are included in the base kit.
The maximum torque of the fixing screw of the coil must not exceed 1Nm.

type: **AE1518253...**

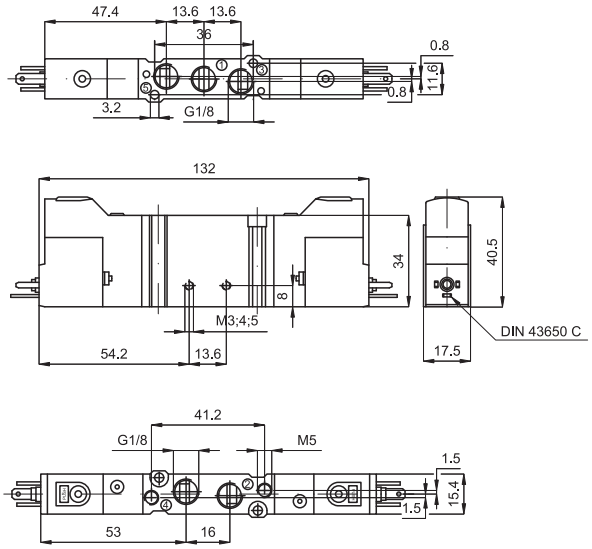

Series of spool valves with reduced dimensions and low electrical consumption, thanks to which they can be operated directly by electronic systems.
The ports are available in various configurations for mounting on base or single use; in case of single use the relevant fixing plate must be applied.
Coils and connectors are to be ordered separately.

For the fixing plate type PF 1518 see page 2.20.1.
For the coils type ASA 18.. see page 2.200.1.
For the connectors type A05207.. see page 2.210.1.
For the sub-bases type SB1.. see page 2.20.1.

In the external air pilot versions the ports for external piloting are M5.

Technical data		
Fluid	Compressed filtered air with or without lubrication. Lubrication, if be used, must be continous.	
Pressure range	3 ÷ 8 bar	With external air pilot: 0 ÷ 8 bar
Temperature range	-5 °C ÷ + 50°C	
Orifice	6 mm	
Flow	600 Nl/min	
Manual override	Single stable position, flat	
Response time	Energising: 24 ms	De-energising: 35 ms
Mounting	In any position	
Materials	Body:	Die-cast aluminium
	Heads:	Acetal resin
	Seals:	Nitrile rubber (NBR)

Electrically and pneumatically operated valves, sizes 15 and 18 mm

Size 15 mm, 5/2 pneumatic single and two stable position

Executions			
Version	Symbol	Code	Item
1/8'' ports, single stable position	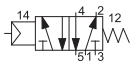	035111	AP15181520
1/8'' ports, two stable positions		035121	AP15182520
1/8'' ports two stable positions, differential		035131	AP15182521

Note: The fixing screws for mounting on sub-base are included in the base kit.

type: **AP1518...**

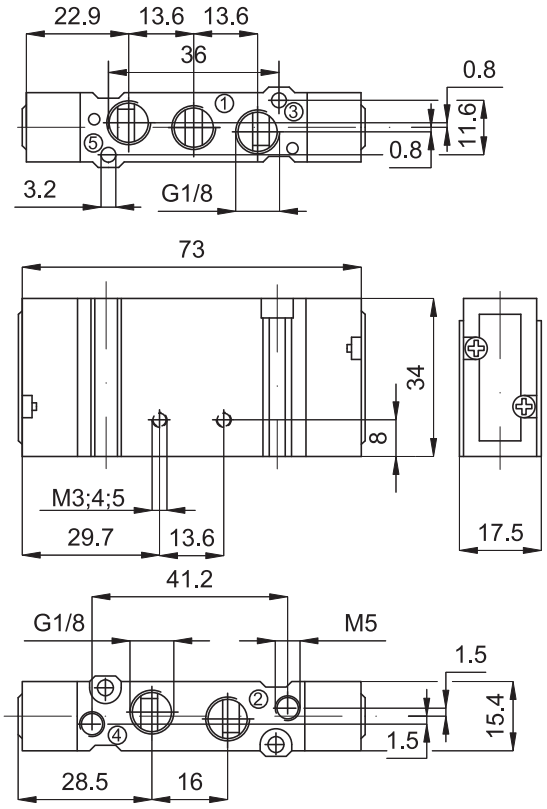

Series of spool valves with reduced dimensions.
The ports are available in various configurations for mounting on base or single use; in case of single use the relevant fixing plate must be applied.

For the fixing plate type PF 1518 see page 2.20.1.
For the sub-bases type SB15.. see page 2.20.1.

The air piloting ports are M5 threaded.

Technical data		
Fluid	Compressed filtered air with or without lubrication. Lubrication, if be used, must be continous.	
Pressure range	2 ÷ 8 bar	
Temperature range	-5 °C ÷ + 50°C	
Orifice	6 mm	
Flow	800 Nl/min	
Mounting	In any position	
Materials	Body:	Die-cast aluminium
	Heads:	Acetal resin
	Seals:	Nitrile rubber (NBR)

Size 15 mm, 5/3 pneumatic

Executions			
Version	Symbol	Code	Item
1/8'' ports, with closed centres	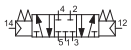	035141	AP1518253C
1/8'' ports, with open centres	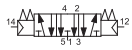	035144	AP1518253A
1/8'' ports, with pressurised centres	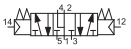	035147	AP1518253P

Note: The fixing screws for mounting on sub-base are included in the base kit.

type: **AP1518253...**

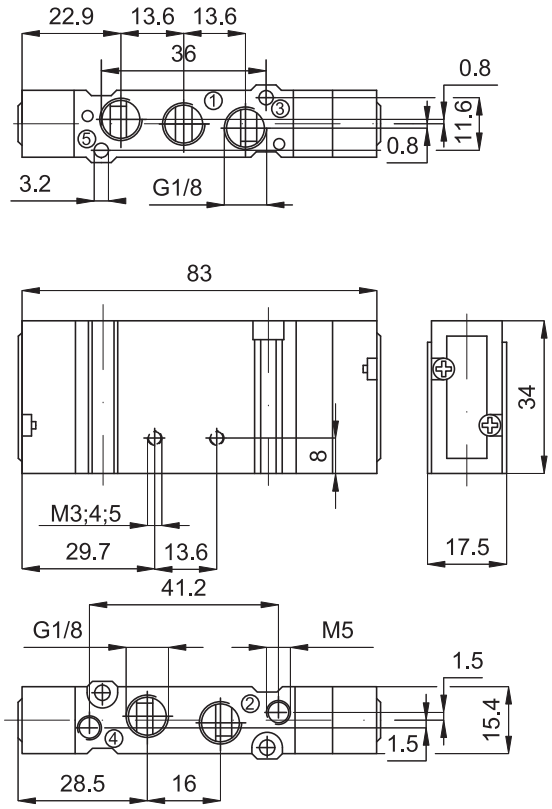

Series of spool valves with reduced dimensions.
The ports are available in various configurations for mounting on base or single use; in case of single use the relevant fixing plate must be applied.

For the fixing plate type PF 1518 see page 2.20.1.
For the sub-bases type SB15.. see page 2.20.1.

The air piloting ports are M5 threaded.

Technical data		
Fluid	Compressed filtered air with or without lubrication. Lubrication, if be used, must be continous.	
Pressure range	2 ÷ 8 bar	
Temperature range	-5 °C ÷ + 50°C	
Orifice	6 mm	
Flow	600 Nl/min	
Mounting	In any position	
Materials	Body:	Die-cast aluminium
	Heads:	Acetal resin
	Seals:	Nitrile rubber (NBR)

Sub-bases, size 15 mm

Executions			
Version	Symbol	Code	Item
Intermediate sub-base		035152	SB15A
Intermediate blank sub-base		035153	SB15C
End plate kit one inlet and one blank		035154	SB15CA
Ported end plates (2 off)		035155	SB15AA
Manifold blanking plate		035156	SB15T
Mounting bracket for single valve		035151	PF1518
Interface for sub-base from size 15 to 18 mm		035157	SB1518

The blank intermediate sub-base can be used to separate 2 inlets at different pressures on the same manifold.

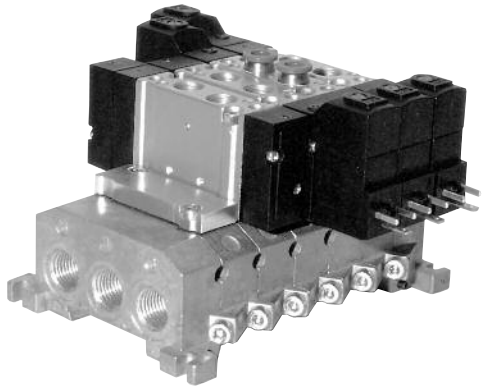

Materials:	Die-cast aluminium
	Seals: Nitrile rubber (NBR)
	Screws: Zinc plated steel

The intermediate sub-base kit includes:
2 screws and 1 seal for mounting the valve
2 screws and 1 seal for assembling the manifold.
The end plate kit includes:
2 screws and 1 seal for assembling the manifold.
The interface kit includes:
2 screws and 1 seal for assembling the manifold.

type: **SB15A**
SB15C

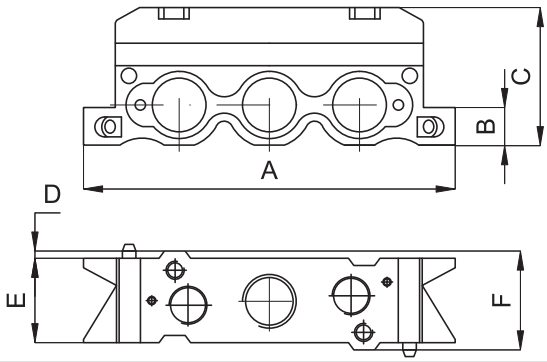

A	B	C	D	E	F
82	8,5	30	1,1	16	18,2

type: **SB1518**

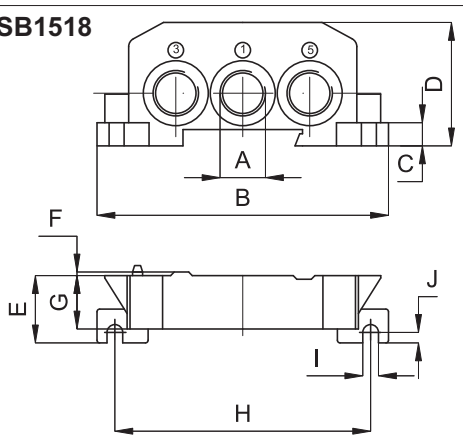

A	B	C	D	E	F	G	H	I	J
1/4”	87	7	37	20	1,1	16	75	4,5	3

type: **SB15CA**
SB15AA

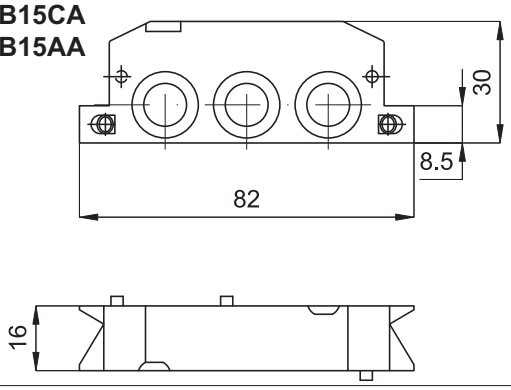

type: **PF1518**

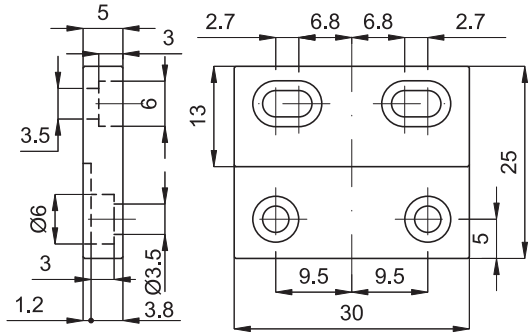

Overall dimensions for manifold with valves mounted

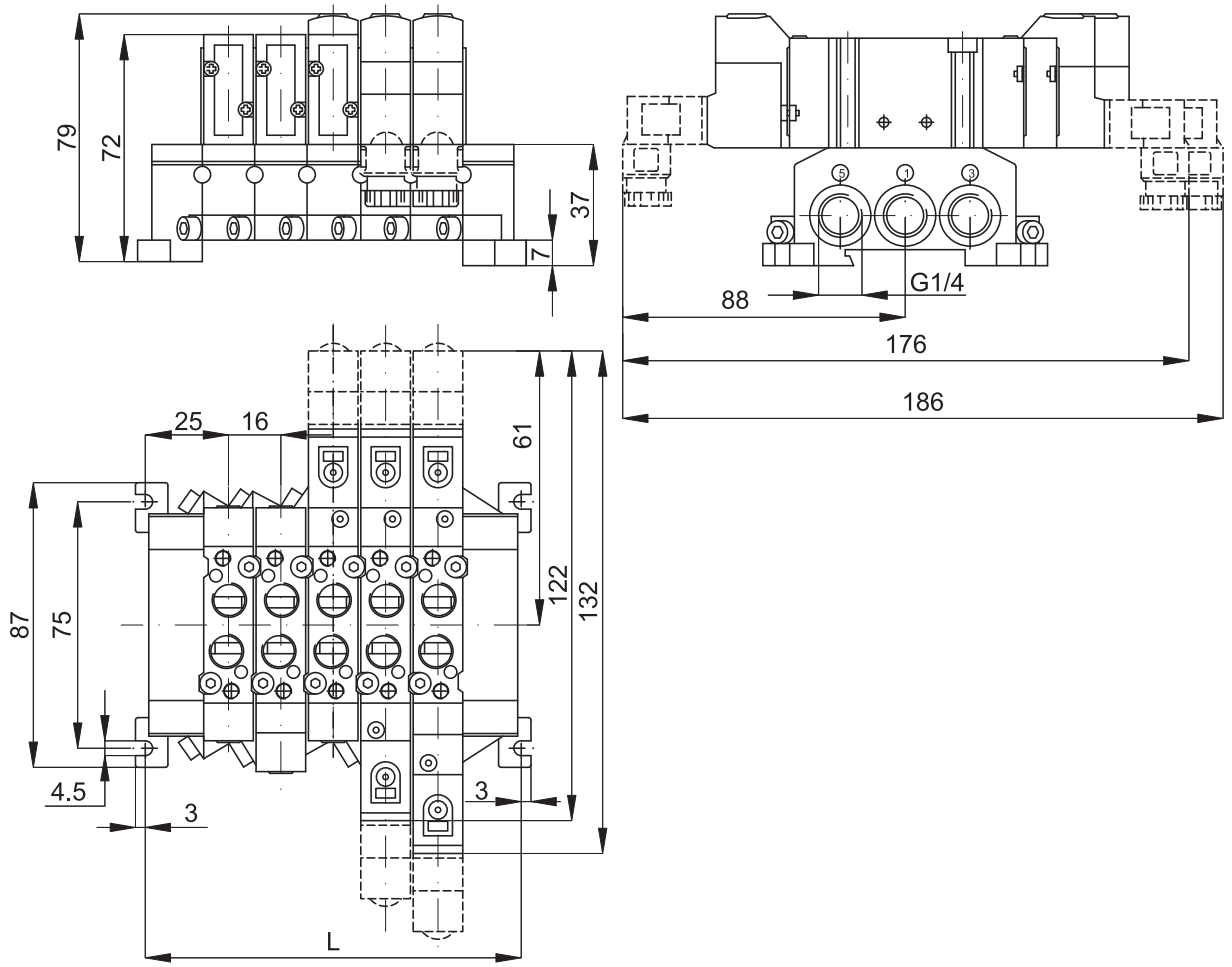

Positions	2	3	4	5	6	7	8	9	10	11	12	13	14	15	16	17	18	19	20
L	66	82	98	114	130	146	162	178	194	210	226	242	258	274	290	306	322	338	354

Size 18 mm, 5/2 electric single stable position

Executions			
Version	Symbol	Code	Item
1/4'' ports	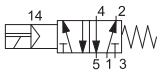	035201	AE18141520
EXTERNAL AIR PILOT			
1/4'' ports	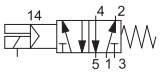	035211	AE18141520K

Note: The fixing screws for mounting on sub-base are included in the base kit.
The maximum torque of the fixing screw of the coil must not exceed 1Nm.

type: **AE18141520**
AE18141520K

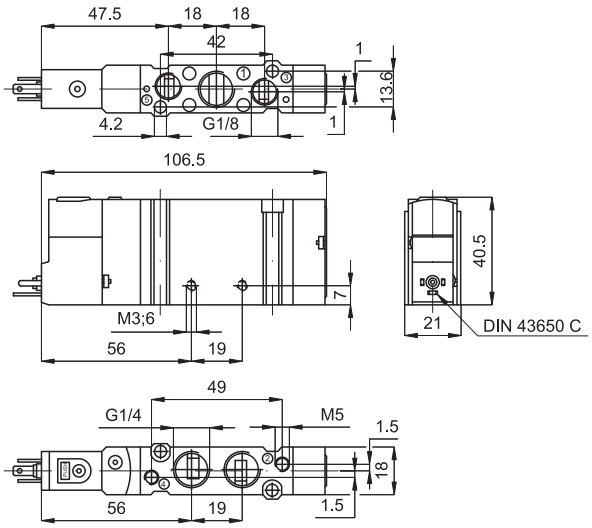

Series of spool valves with reduced dimensions and low electrical consumption, thanks to which they can be operated directly by electronic systems.
The ports are available in various configurations for mounting on base or single use; in case of single use the relevant fixing plate must be applied.
Coils and connectors are to be ordered separately.

For the fixing plate type PF 1518 see page 2.20.1.
For the coils type ASA 18.. see page 2.200.1.
For the connectors type A05207.. see page 2.210.1.
For the sub-bases type SB18.. see page 2.40.1.

In the external air pilot versions the ports for external piloting are M5.

The exhausts are 1/8''.

Technical data		
Fluid	Compressed filtered air with or without lubrication. Lubrication, if be used, must be continous.	
Pressure range	2 ÷ 8 bar	With external air pilot: 0 ÷ 8 bar
Temperature range	-5 °C ÷ + 50°C	
Orifice	8 mm	
Flow	1200 Nl/min	
Manual override	Single stable position, flat	
Response time	Energising: 24 ms	De-energising: 35 ms
Mounting	In any position	
Materials	Body:	Die-cast aluminium
	Heads:	Acetal resin
	Seals:	Nitrile rubber (NBR)

Size 18 mm, 5/2 electric two stable position

Executions			
Version	Symbol	Code	Item
1/4'' ports	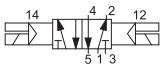	035221	AE18142520
EXTERNAL AIR PILOT			
1/4'' ports	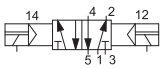	035231	AE18142520K

Note: The fixing screws for mounting on sub-base are included in the base kit.
The maximum torque of the fixing screw of the coil must not exceed 1Nm.

type: **AE18142520**
AE18142520K

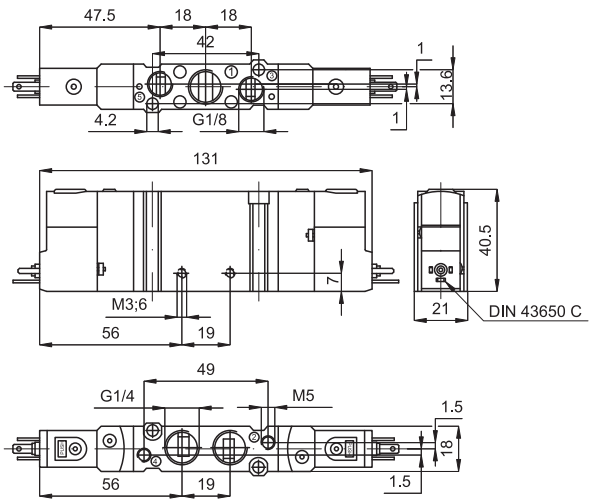

Series of spool valves with reduced dimensions and low electrical consumption, thanks to which they can be operated directly by electronic systems.
The ports are available in various configurations for mounting on base or single use; in case of single use the relevant fixing plate must be applied.
Coils and connectors are to be ordered separately.

For the fixing plate type PF 1518 see page 2.20.1.
For the coils type ASA 18.. see page 2.200.1.
For the connectors type A05207.. see page 2.210.1.
For the sub-bases type SB18.. see page 2.40.1.

In the external air pilot versions the ports for external piloting are M5.

The exhausts are 1/8''.

Technical data		
Fluid	Compressed filtered air with or without lubrication. Lubrication, if be used, must be continous.	
Pressure range	2 ÷ 8 bar	With external air pilot: 0 ÷ 8 bar
Temperature range	-5 °C ÷ + 50°C	
Orifice	8 mm	
Flow	1200 Nl/min	
Manual override	Single stable position, flat	
Response time	Energising: 24 ms	
Mounting	In any position	
Materials	Body:	Die-cast aluminium
	Heads:	Acetal resin
	Seals:	Nitrile rubber (NBR)

Executions

Version	Symbol	Code	Item
1/4” ports, with closed centres		035241	AE1814253C
1/4” ports, with open centres		035244	AE1814253A
1/4” ports, with pressurised centres	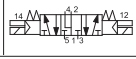	035247	AE1814253P
EXTERNAL AIR PILOT			
1/4” ports, with closed centres	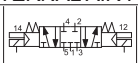	035251	AE1814253CK
1/4” ports, with open centres		035254	AE1814253AK
1/4” ports, with pressurised centres	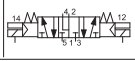	035257	AE1814253PK

Note: The fixing screws for mounting on sub-base are included in the base kit.
The maximum torque of the fixing screw of the coil must not exceed 1Nm.

type: **AE1814253...**

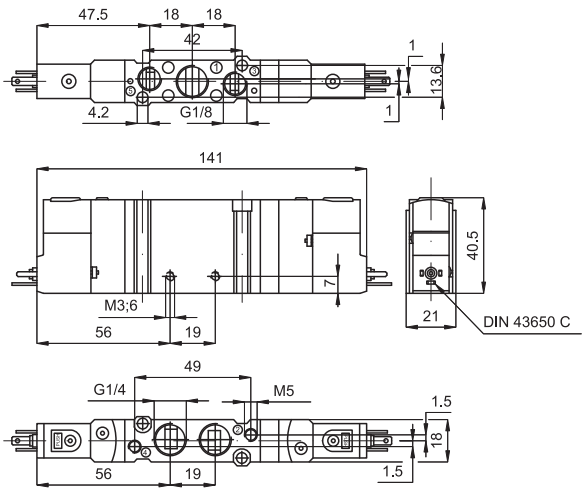

Series of spool valves with reduced dimensions and low electrical consumption, thanks to which they can be operated directly by electronic systems.
The ports are available in various configurations for mounting on base or single use; in case of single use the relevant fixing plate must be applied.
Coils and connectors are to be ordered separately.

For the fixing plate type PF 1518 see page 2.20.1.
For the coils type ASA 18.. see page 2.200.1.
For the connectors type A05207.. see page 2.210.1.
For the sub-bases type SB18.. see page 2.40.1.

In the external air pilot versions the ports for external piloting are M5.

The exhausts are 1/8’’.

Technical data

Fluid	Compressed filtered air with or without lubrication. Lubrication, if be used, must be continous.	
Pressure range	3 ÷ 8 bar	With external air pilot: 0 ÷ 8 bar
Temperature range	-5 °C ÷ + 50°C	
Orifice	8 mm	
Flow	700 Nl/min	
Manual override	Single stable position, flat	
Response time	Energising: 24 ms	De-energising: 35 ms
Mounting	In any position	
Materials	Body: Die-cast aluminium Heads: Acetal resin Seals: Nitrile rubber (NBR)	

Size 18 mm, 5/2 pneumatic single and two stable position

Executions			
Version	Symbol	Code	Item
1/4'' ports, single stable position	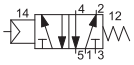	035261	AP18141520
1/4'' ports, two stable positions		035271	AP18142520
1/4'' ports, two stable positions, differential		035281	AP18142521

Note: The fixing screws for mounting on sub-base are included in the base kit.

type: **AP1814...**

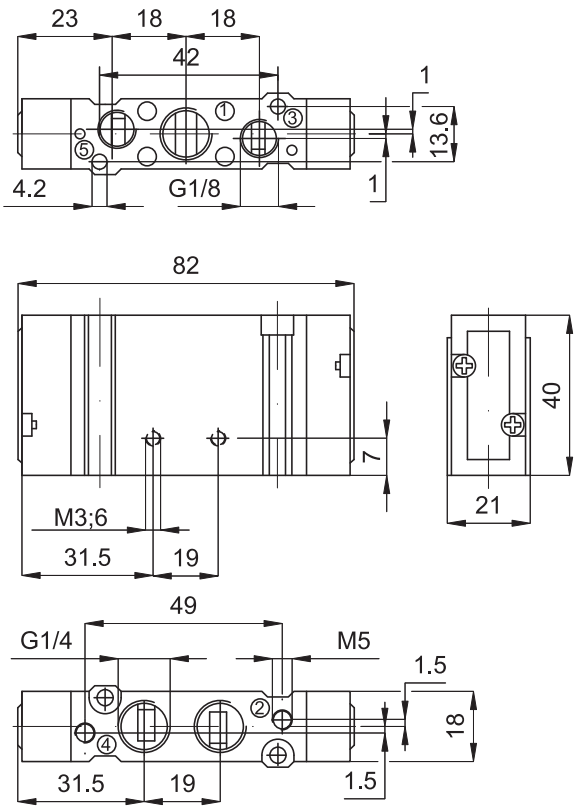

Series of spool valves with reduced dimensions.
The ports are available in various configurations for mounting on base or single use; in case of single use the relevant fixing plate must be applied.

For the fixing plate type PF 1518 see page 2.20.1.
For the sub-bases type SB18.. see page 2.40.1.

The air piloting ports are M5 threaded.

The exhausts are 1/8''.

Technical data		
Fluid	Compressed filtered air with or without lubrication. Lubrication, if be used, must be continous.	
Pressure range	2 ÷ 8 bar	
Temperature range	-5 °C ÷ + 50°C	
Orifice	8 mm	
Flow	1200 Nl/min	
Mounting	In any position	
Materials	Body:	Die-cast aluminium
	Heads:	Acetal resin
	Seals:	Nitrile rubber (NBR)

Electrically and pneumatically operated valves, sizes 15 and 18 mm

Size 18 mm, 5/3 pneumatic

Executions			
Version	Symbol	Code	Item
1/4'' ports, with closed centres	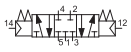	035291	AP1814253C
1/4'' ports, with open centres	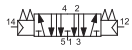	035301	AP1814253A
1/4'' ports, with pressurised centres	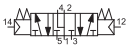	035311	AP1814253P

Note: The fixing screws for mounting on sub-base are included in the base kit.

type: **AP1814253...**

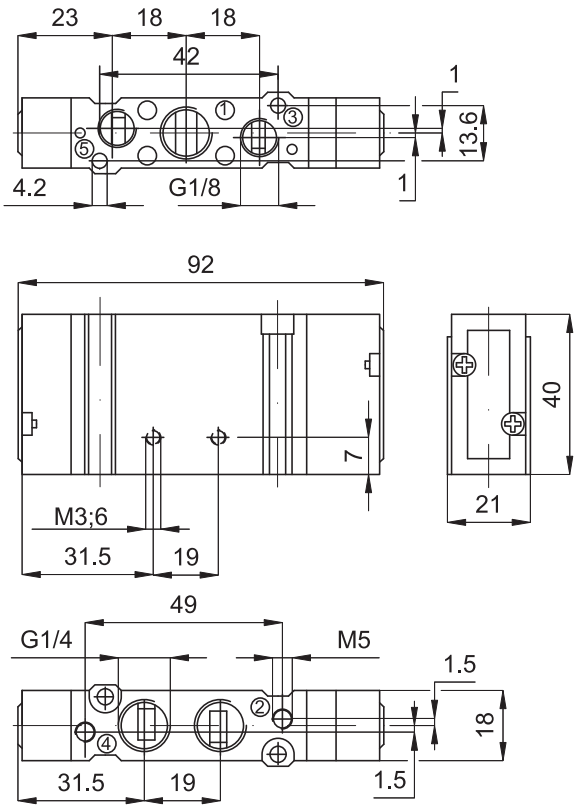

Series of spool valves with reduced dimensions.
The ports are available in various configurations for mounting on base or single use; in case of single use the relevant fixing plate must be applied.

For the fixing plate type PF 1518 see page 2.20.1.
For the sub-bases type SB18.. see page 2.40.1.

The air piloting ports are M5 threaded.

The exhausts are 1/8''.

Technical data		
Fluid	Compressed filtered air with or without lubrication. Lubrication, if be used, must be continous.	
Pressure range	2 ÷ 8 bar	
Temperature range	-5 °C ÷ + 50°C	
Orifice	8 mm	
Flow	700 Nl/min	
Mounting	In any position	
Materials	Body:	Die-cast aluminium
	Heads:	Acetal resin
	Seals:	Nitrile rubber (NBR)

Executions			
Version	Symbol	Code	Item
Intermediate sub-base		035321	SB18A
Intermediate blank sub-base		035322	SB18C
End plate kit one inlet and one blank		035323	SB18CA
Ported end plates (2 off)		035324	SB18AA
Manifold blanking plate		035325	SB18T
Mounting bracket for single valve		035151	PF1518
Interface for sub-base from size 15 to 18 mm		035157	SB1518

The blank intermediate sub-base can be used to separate 2 inlets at different pressures on the same manifold.

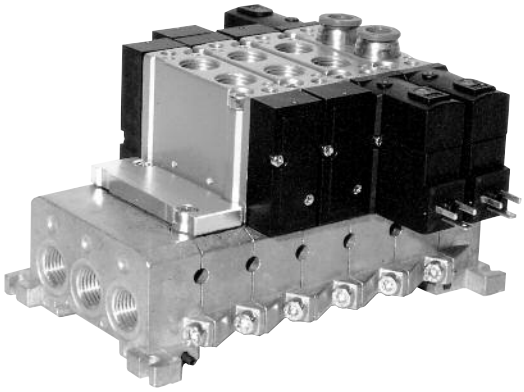

Materials:	Die-cast aluminium
	Seals: Nitrile rubber (NBR)
	Screws: Zinc plated steel

The intermediate sub-base kit includes:
2 screws and 1 seal for mounting the valve
2 screws and 1 seal for assembling the manifold.
The end plate kit includes:
2 screws and 1 seal for assembling the manifold.
The interface kit includes:
2 screws and 1 seal for assembling the manifold.

type: **SB18A**
SB18C

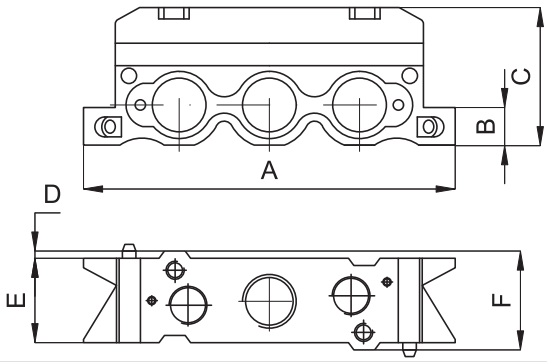

A	B	C	D	E	F
82	8,5	30	1,1	16	18,2

type: **SB1518**

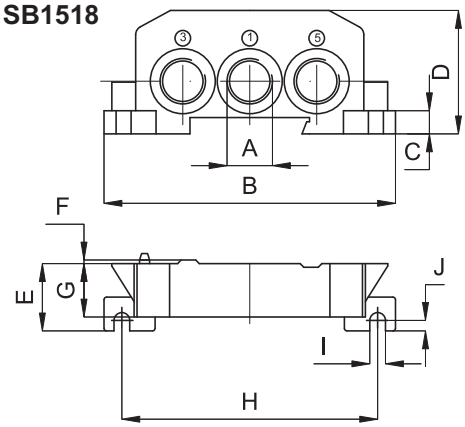

A	B	C	D	E	F	G	H	I	J
1/4”	87	7	37	20	1,1	16	75	4,5	3

type: **SB15CA**
SB15AA

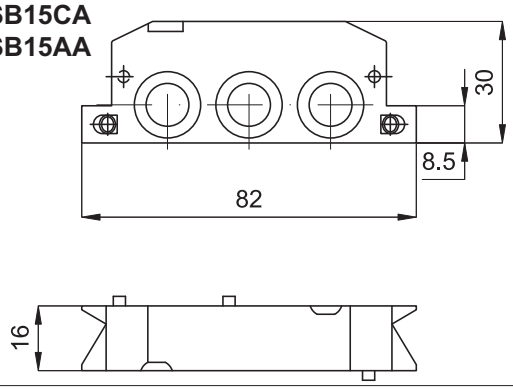

type: **PF1518**

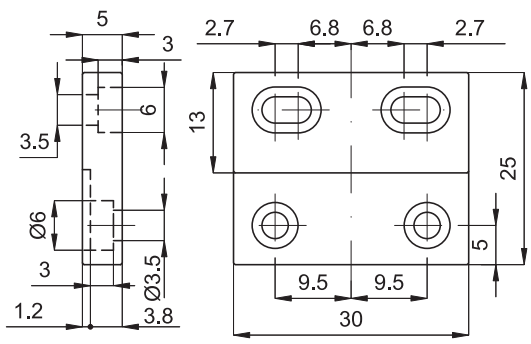

Overall dimensions for manifold with valves mounted

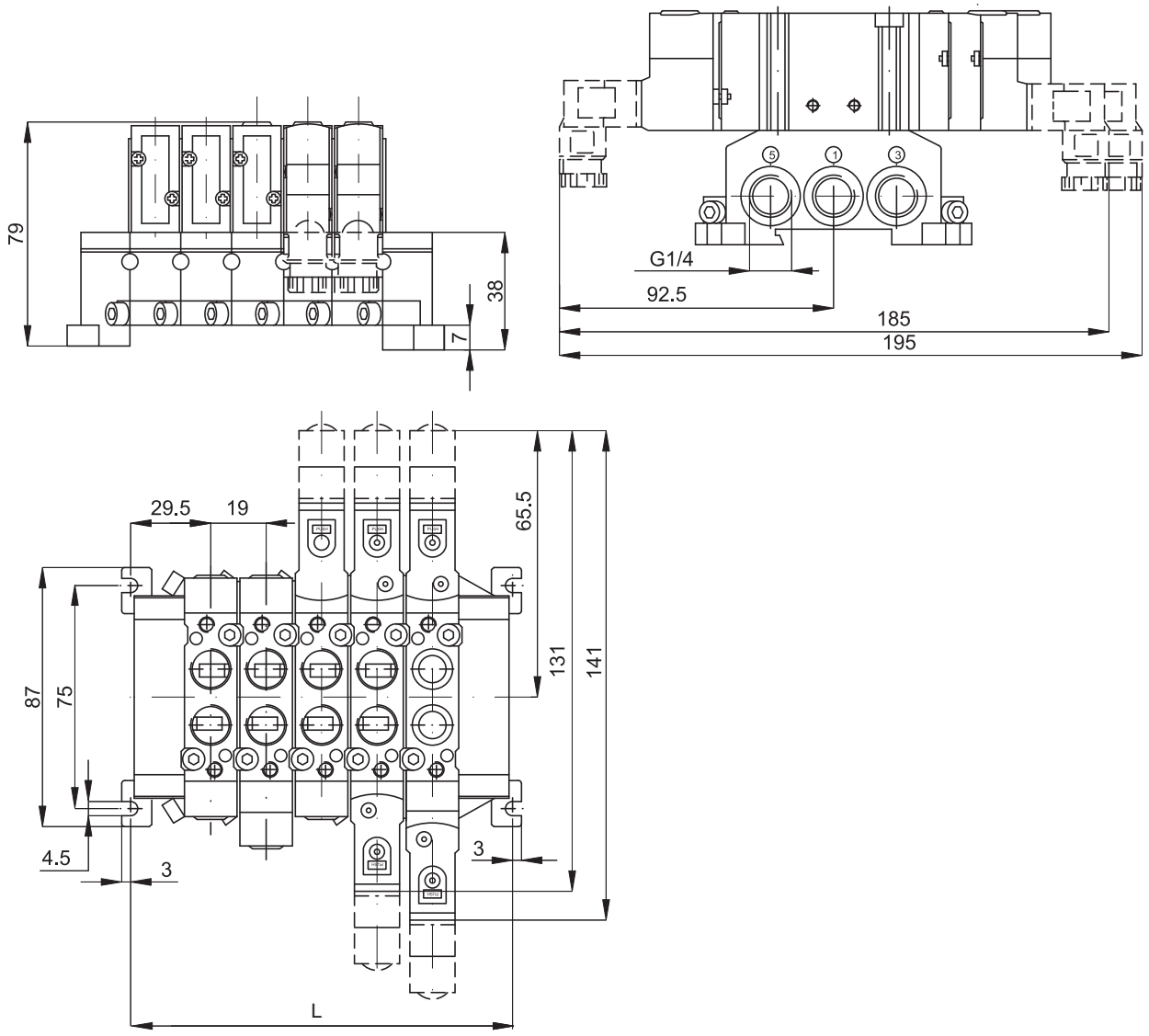

Positions	2	3	4	5	6	7	8	9	10	11	12	13	14	15	16	17	18	19	20
L	78	97	116	135	154	173	192	211	230	249	268	287	306	325	344	363	382	401	420

Executions

Version	Symbol	Code	Item
3/2 NC	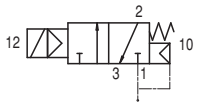	034003	A1E130
3/2 NO	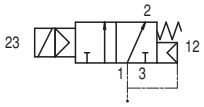	034004	A1E131
3/2 solenoid/solenoid	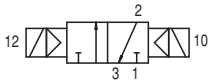	034005	A1E132
3/2 NC external air pilot	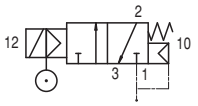	034006	A1K130
3/2 solenoid/solenoi, external air pilot	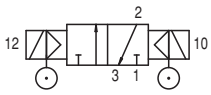	034007	A1K132

On request, they can be supplied according Directive 94/9/EC - **ATEX**
CE Ex **II 2 GDc T5**

Series of spool valves, with static seals, high flow, for panel or sub-base mounting.
Coils and connectors are to be ordered separately.
For the coils type ASA12... see page 2.200.1
For the connectors type A122... see page 2.210.20
For the sub-bases type A1B1... see page 2.65.1

Code key

Series	Actuation	Size	Function
A1	E = electrical K = electrical with external air pilot	1 = 1/8” 2 = 1/4	30 = 3/2 NC 31 = 3/2 NO 32 = 3/2 solenoid/solenoid 50 = 5/2 solenoid/spring 51 = 5/2 solenoid/solenoid 70 = 5/3 CC 71 = 5/3 CO 72 = 5/3 CP

Technical data

Fluid	Compressed filtered air with or without lubrication. Lubrication, if be used, must be continous.	
Pressure range	1 ÷ 10 bar	
Temperature range	-10°C ÷ +60°C	
Orifice	6,5 mm	
Flow	650 Nl/min at 6 bar with ΔP 1 bar	
Minimum piloting pressure	1,5 bar	Minimum external air pressure: 1,5 bar
Mounting	In any position	
Manual override	Two stable positions	
Response time	Energising:	De-energising:
Materials	Body: Aluminium Heads: Plastic Spool: Chemical nickel plated aluminium Distancers: Plastic Seals: Nitrile rubber (NBR)	

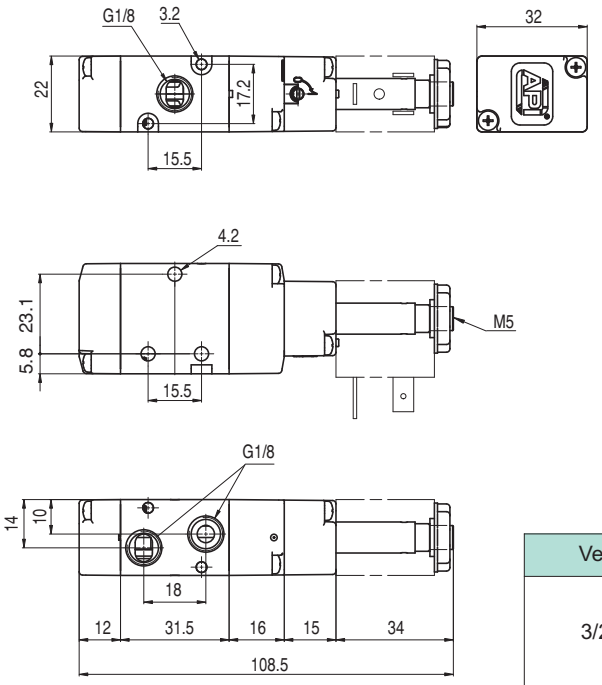

Version	Symbol	Code	Item
3/2 NC	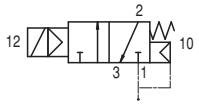	034003	A1E130
3/2 NO	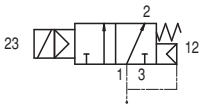	034004	A1E131

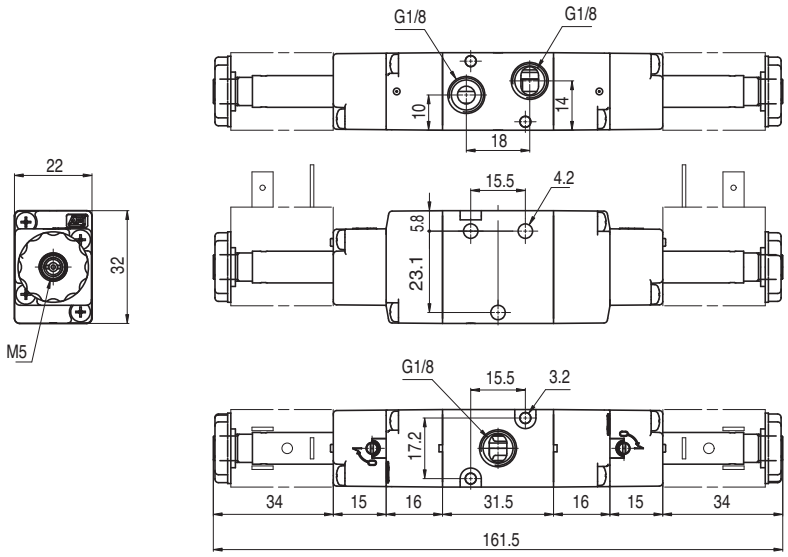

Version	Symbol	Code	Item
3/2 solenoid/solenoid	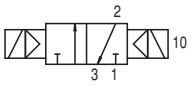	034005	A1E132

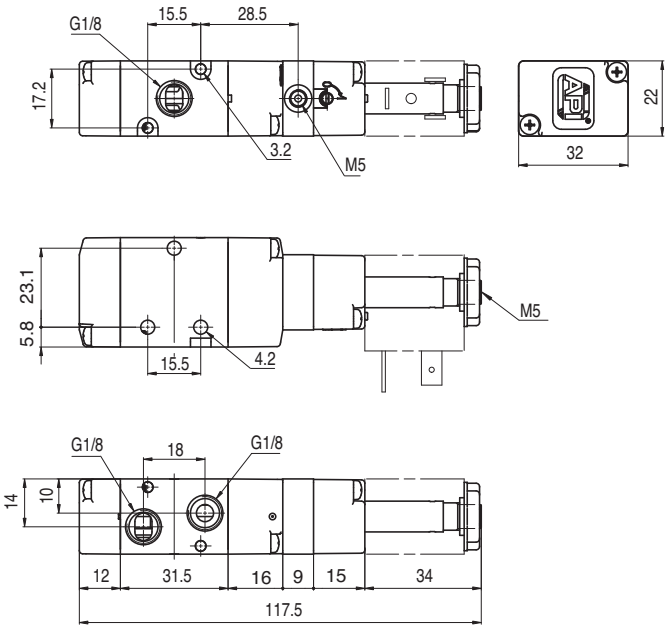

Version	Symbol	Code	Item
3/2 NC external air pilot	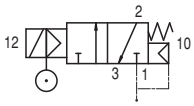	034006	A1K130

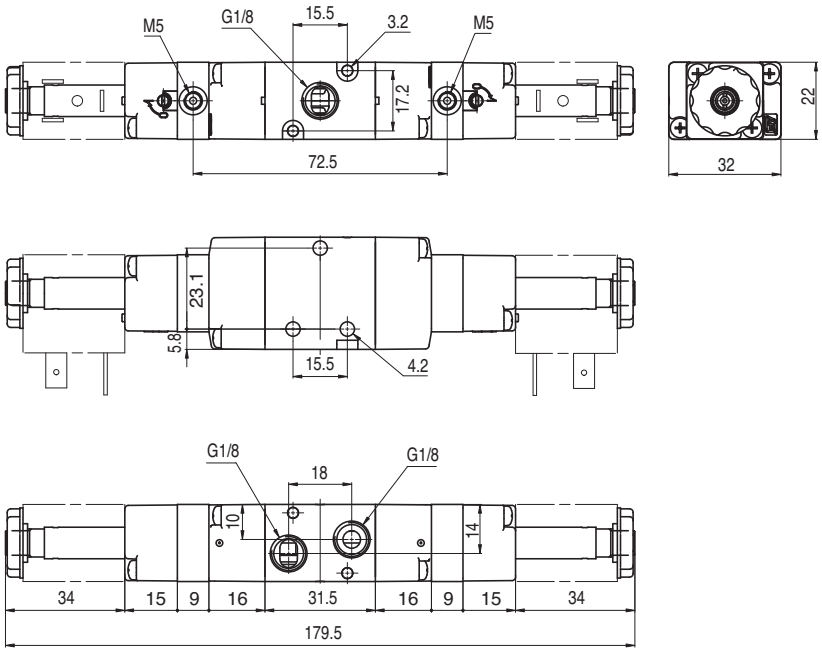

Version	Symbol	Code	Item
3/2 solenoid/solenoid, external air pilot	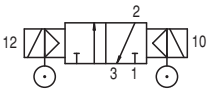	034007	A1K132

Valves series A1

1/8”, 5/2 - 5/3, electrically operated

Executions

Version	Symbol	Code	Item
5/2 solenoid/spring	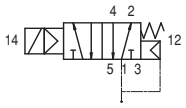	034011	A1E150
5/2 solenoid/solenoid	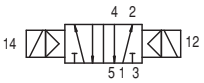	034021	A1E151
5/3 with closed centres	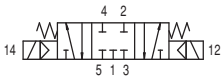	034031	A1E170
5/3 with open centres	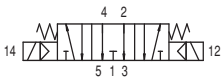	034033	A1E171
5/3 with pressurised centres	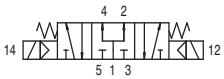	034032	A1E172
5/2 solenoid/spring, external air pilot	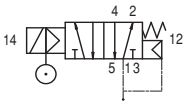	034012	A1K150
5/2 solenoid/solenoid, external air pilot	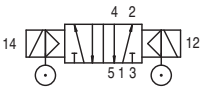	034008	A1K151
5/3 with closed centres, external air pilot	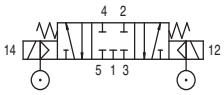	034009	A1K170
5/3 with open centres, external air pilot	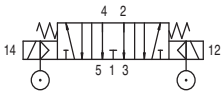	034010	A1K171
5/3 with pressurised centres, external air pilot	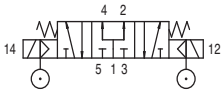	034013	A1K172

Series of spool valves, with static seals, high flow, for panel or sub-base mounting.
Coils and connectors are to be ordered separately.

For the coils type ASA12... see page 2.200.1
For the connectors type A122... see page 2.210.20
For the sub-bases type A1B1... see page 2.65.1

Code key

Series	Actuation	Size	Function
A1	E = electrical K = elettrical with external air pilot	1 = 1/8” 2 = 1/4”	30 = 3/2 NC 31 = 3/2 NO 32 = 3/2 solenoid/solenoid 50 = 5/2 solenoid/spring 51 = 5/2 solenoid/solenoid 70 = 5/3 CC 71 = 5/3 CO 72 = 5/3 CP

On request, they can be supplied according Directive 94/9/EC - **ATEX**
CE Ex **II 2 GDc T5**

Technical data

Fluid	Compressed filtered air with or without lubrication. Lubrication, if be used, must be continous.	
Pressure range	1 ÷ 10 bar	5/3 = 2,5 ÷ 10 bar
Temperature range	-10°C ÷ +60°C	
Orifice	6,5 mm	
Flow	650 Nl/min at 6 bar with ΔP 1 bar	
Minimum piloting pressure	1,5 bar	Minimum external air pressure: 1,5 bar
Mounting	In any position	
Manual override	Two stable positions	
Response time	Energising:	De-energising:
Materials	Body: Aluminium Heads: Plastic Spool: Chemical nickel plated aluminium Distancers: Plastic Seals: Nitrile rubber (NBR)	

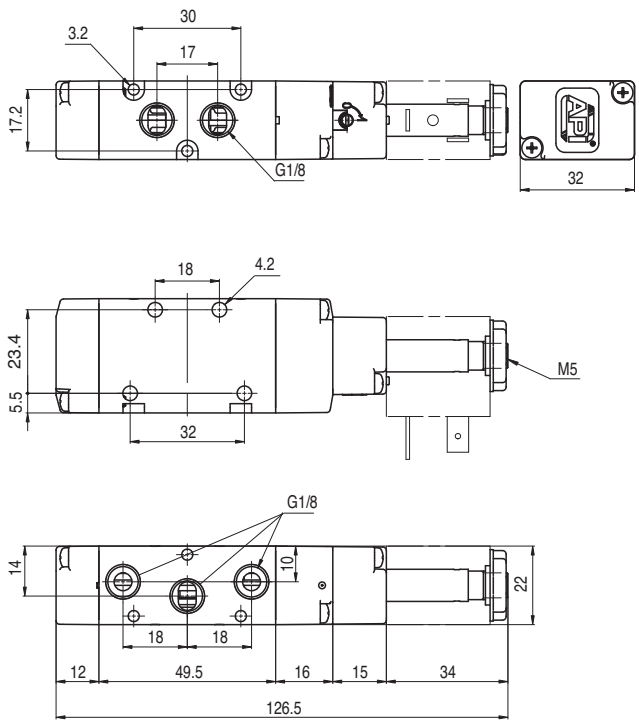

Version	Symbol	Code	Item
5/2 solenoid/spring	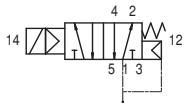	034011	A1E150

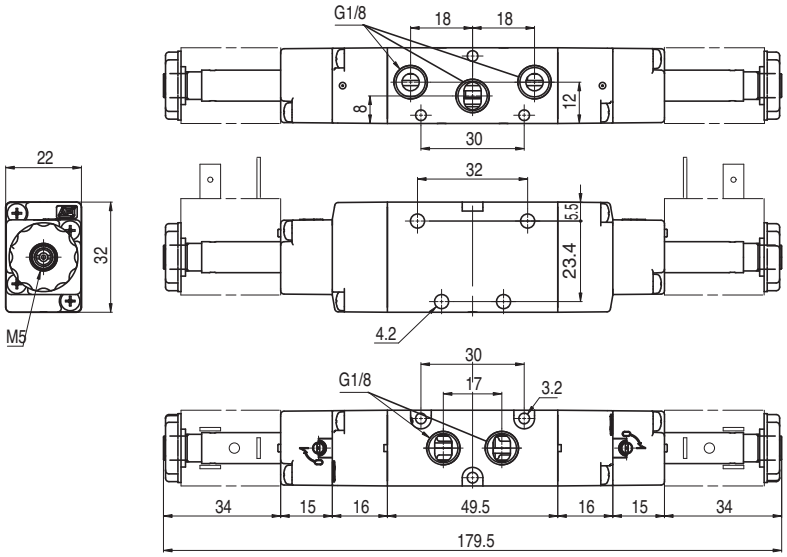

Version	Symbol	Code	Item
5/2 solenoid/solenoid	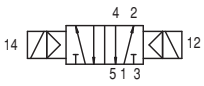	034021	A1E151

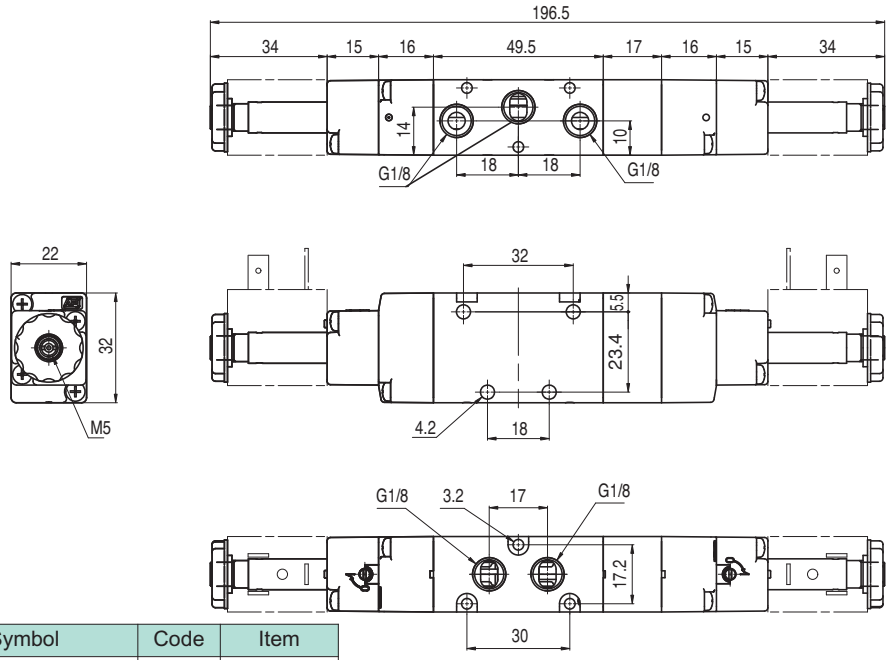

Version	Symbol	Code	Item
5/3 with closed centres	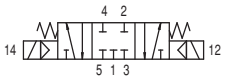	034031	A1E170
5/3 with open centres	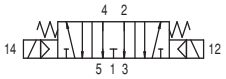	034033	A1E171
5/3 with pressurised centres	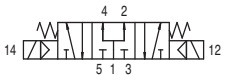	034032	A1E172

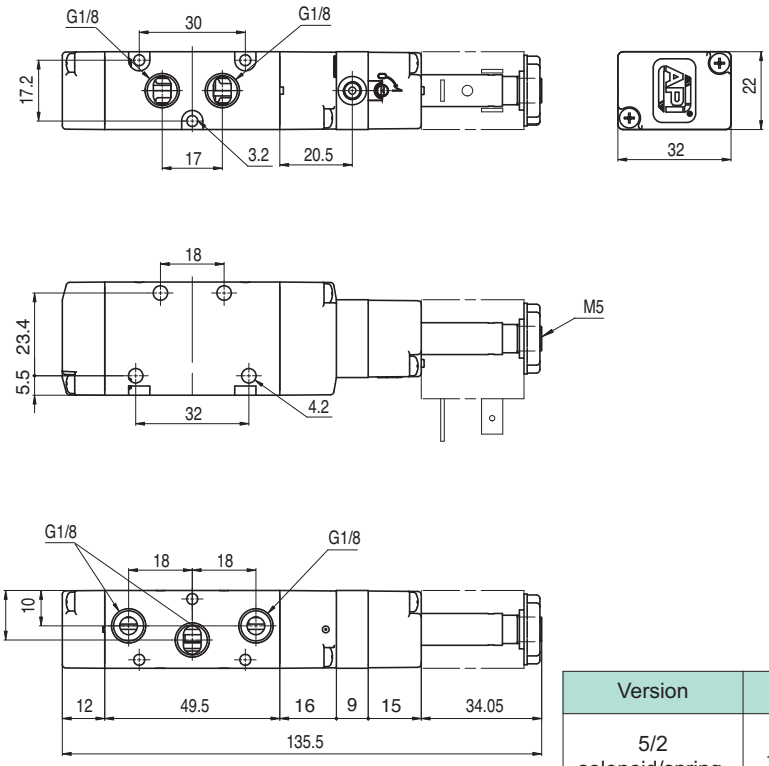

Version	Symbol	Code	Item
5/2 solenoid/spring, external air pilot	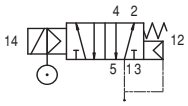	034012	A1K150

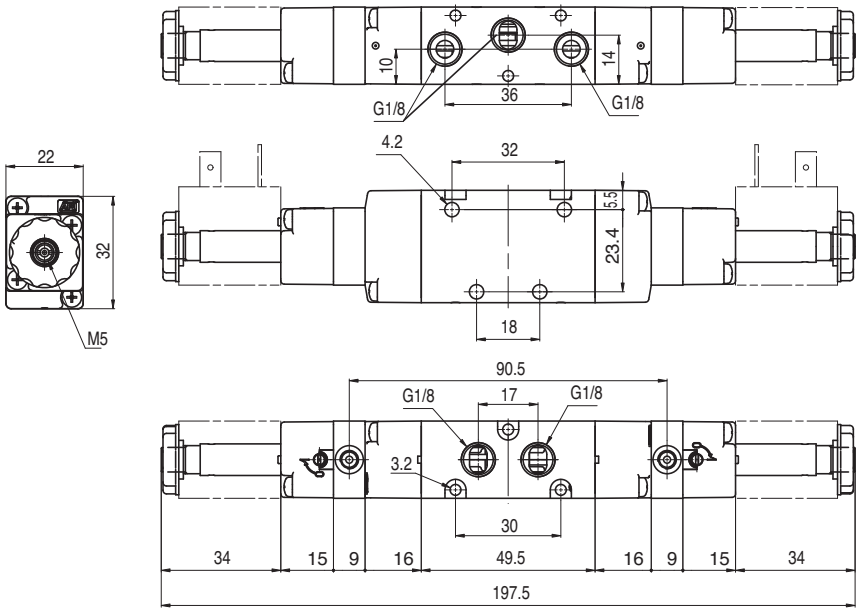

Version	Symbol	Code	Item
5/2 solenoid/solenoid, external air pilot	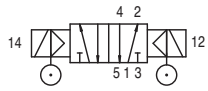	034008	A1K151

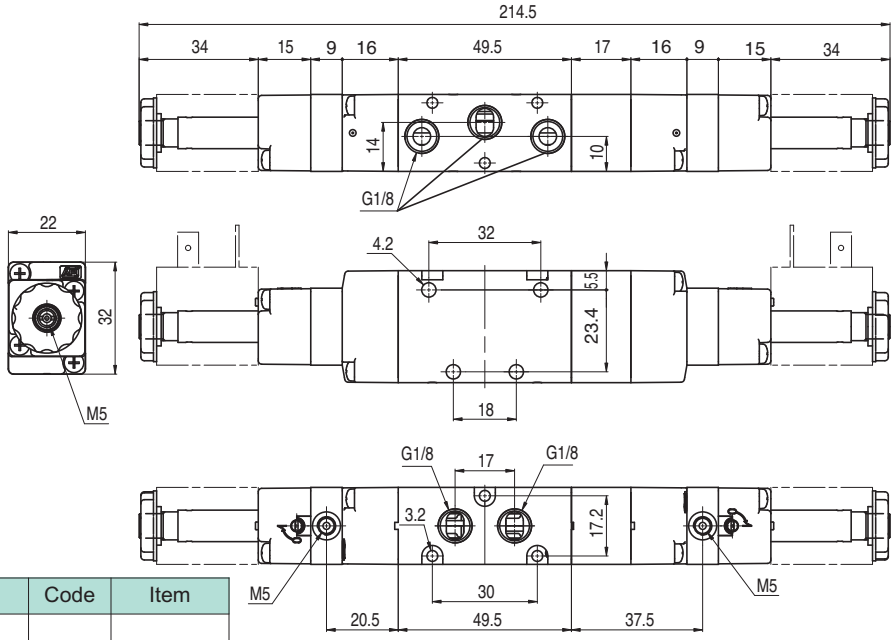

Version	Symbol	Code	Item
5/3 with closed centres, external air pilot	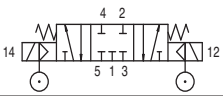	034009	A1K170
5/3 with open centres, external air pilot	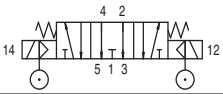	034010	A1K171
5/3 with pressurised centres, external air pilot	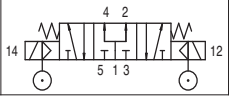	034013	A1K172

Valves series A1

1/8”, 3/2, pneumatically operated

Executions

Version	Symbol	Code	Item
3/2 NC	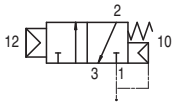	034014	A1P130
3/2 NO	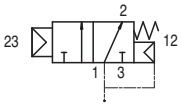	034015	A1P131
3/2 pilot/pilot	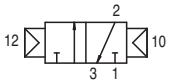	034016	A1P132
3/2 pilot/pilot, differential	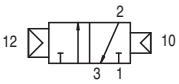	034017	A1P133

Series of spool valves, with static seals, high flow, for panel or sub-base mounting.
For the sub-bases type A1B1... see page.2.65.1

On request, they can be supplied according Directive 94/9/EC - **ATEX**
CE Ex **II 2 GDc T5**

Code key

Series	Actuation	Size	Function
A1	P = pneumatic	1 = 1/8” 2 = 1/4”	30 = 3/2 NC 31 = 3/2 NO 32 = 3/2 pilot/pilot 33 = 3/2 pilot/pilot, differential 50 = 5/2 pilot/spring 51 = 5/2 pilot/pilot 52 = 5/2 pilot/pilot, differential 70 = 5/3 CC 71 = 5/3 CO 72 = 5/3 CP

Technical data

Fluid	Compressed filtered air with or without lubrication. Lubrication, if be used, must be continous.	
Pressure range	1 ÷ 10 bar	
Temperature range	-10°C ÷ +60°C	
Orifice	6,5 mm	
Flow	650 Nl/min at 6 bar with ΔP 1 bar	
Minimum piloting pressure	1,5 bar	
Mounting	In any position	
Response time	Energising:	De-energising:
Materials	Body: Aluminium Heads: Plastic Spool: Chemical nickel plated aluminium Distancers: Plastic Seals: Nitrile rubber (NBR)	

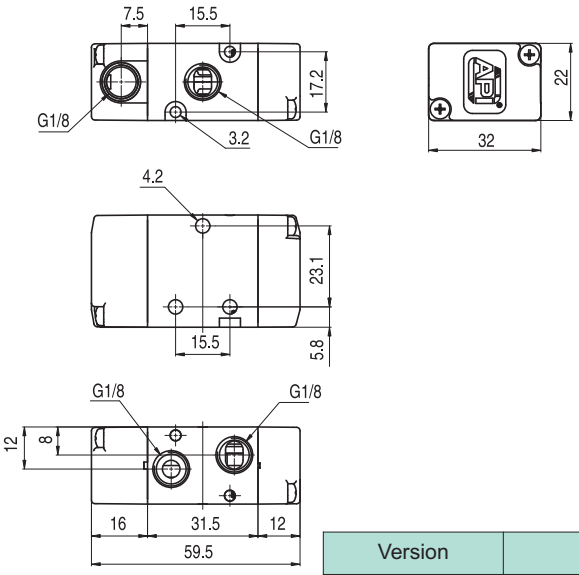

Version	Symbol	Code	Item
3/2 NC	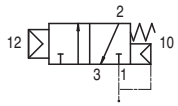	034014	A1P130
3/2 NO	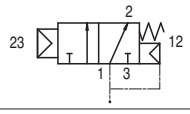	034015	A1P131

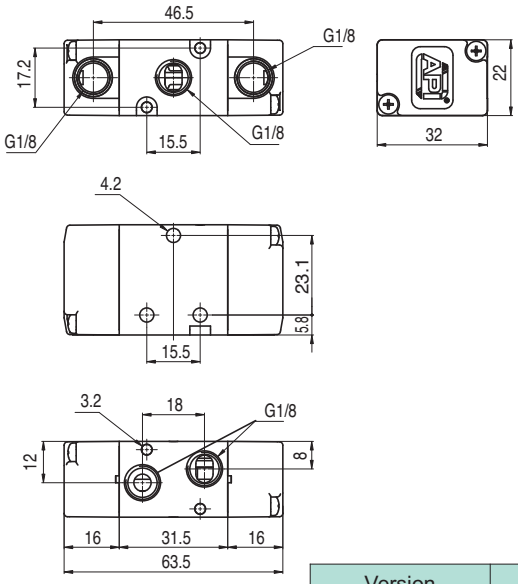

Version	Symbol	Code	Item
3/2 pilot/pilot	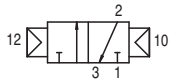	034016	A1P132
3/2 pilot/pilot, differential	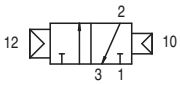	034017	A1P133

Valves series A1

1/8”, 5/2 - 5/3, pneumatically operated

Executions			
Version	Symbol	Code	Item
5/2 pilot/spring	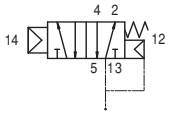	034001	A1P150
5/2 pilot/pilot	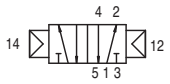	034002	A1P151
5/2 pilot/pilot, differential	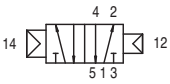	034018	A1P152
5/3 with closed centres	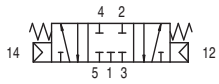	034019	A1P170
5/3 with open centres	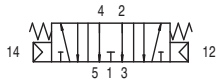	034020	A1P171
5/3 with pressurised centres	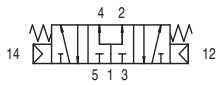	034022	A1P172

Series of spool valves, with static seals, high flow, for panel or sub-base mounting.
For the sub-bases type A1B1... see page 2.65.1

On request, they can be supplied according Directive 94/9/EC - **ATEX**
CE Ex **II 2 GDc T5**

Code key

Series	Actuation	Size	Function
A1	P = pneumatic	1 = 1/8” 2 = 1/4”	30 = 3/2 NC 31 = 3/2 NO 32 = 3/2 pilot/pilot 33 = 3/2 pilot/pilot, differential 50 = 5/2 pilot/spring 51 = 5/2 pilot/pilot 52 = 5/2 pilot/pilot, differential 70 = 5/3 CC 71 = 5/3 CO 72 = 5/3 CP

Technical data		
Fluid	Compressed filtered air with or without lubrication. Lubrication, if be used, must be continous.	
Pressure range	1 ÷ 10 bar	5/3 = 2,5 ÷ 10 bar
Temperature range	-10°C ÷ +60°C	
Orifice	6,5 mm	
Flow	650 Nl/min at 6 bar with ΔP 1 bar	
Minimum piloting pressure	1,5 bar	
Mounting	In any position	
Response time	Energising:	De-energising:
Materials	Body: Aluminium Heads: Plastic Spool: Chemical nickel plated aluminium Distancers: Plastic Seals: Nitrile rubber (NBR)	

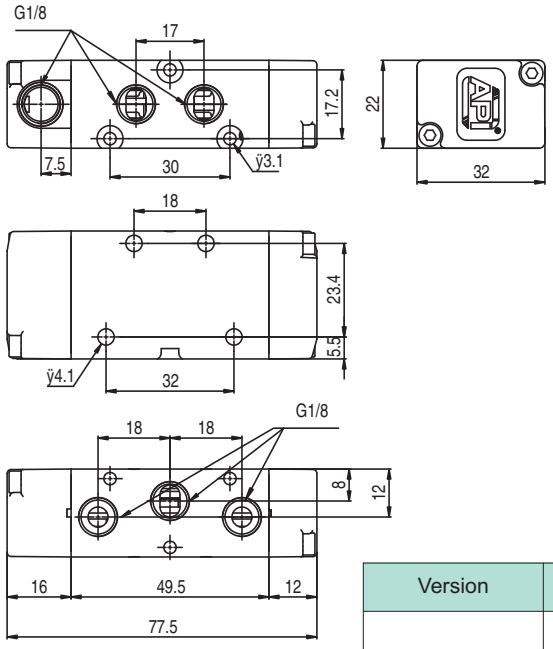

Version	Symbol	Code	Item
5/2 pilot/spring	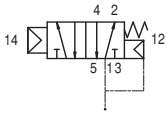	034001	A1P150

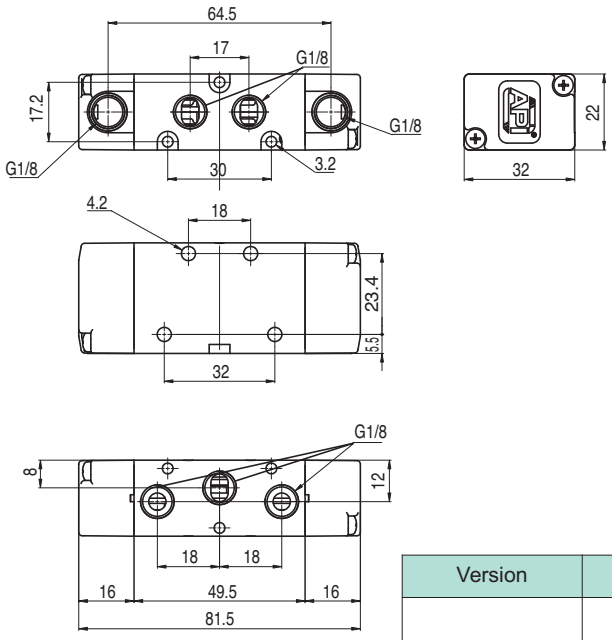

Version	Symbol	Code	Item
5/2 pilot/pilot	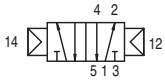	034002	A1P151
5/2 pilot/pilot, differential	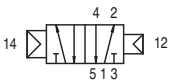	034018	A1P152

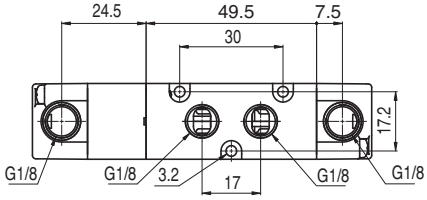

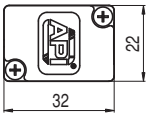

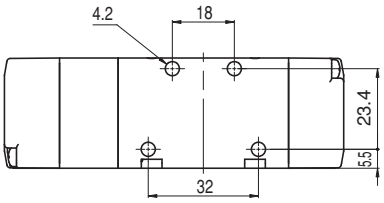

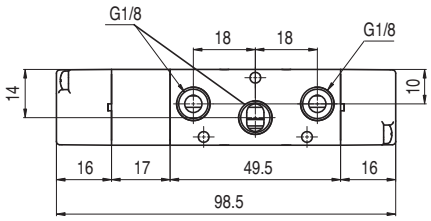

Version	Symbol	Code	Item
5/3 with closed centres	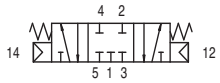	034019	A1P170
5/3 with open centres	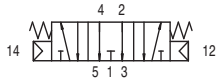	034020	A1P171
5/3 with pressurised centres	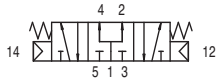	034022	A1P172

Executions		
Version	Code	Item
2 positions	034041	A1B102
3 positions	034042	A1B103
4 positions	034043	A1B104
5 positions	034044	A1B105
6 positions	034045	A1B106
7 positions	034046	A1B107
8 positions	034047	A1B108
9 positions	034048	A1B109
10 positions	034049	A1B110
blanking plate	034050	A1C1
plug	034051	A1T1

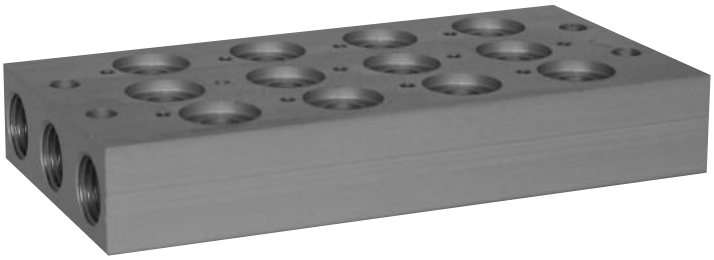

Multi-position sub-bases with fixed position, for valves series A1, 3 and 5 ways. 2 fixing screws for each position and the relevant seals are included in the base kit.
Spare positions can be blanked with plate.

Material:	Profiled anodised aluminium

On request, they can be supplied according Directive 94/9/EC - **ATEX**
CE Ex **II 2 GDc T5**

Code key

Series	Product	Size	N° positions
A1	B = base C = blanking plate T = plug	1 = 1/8” 2 = 1/4”	from 02 to 10

Plug

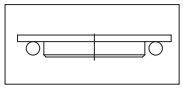

Blanking plate

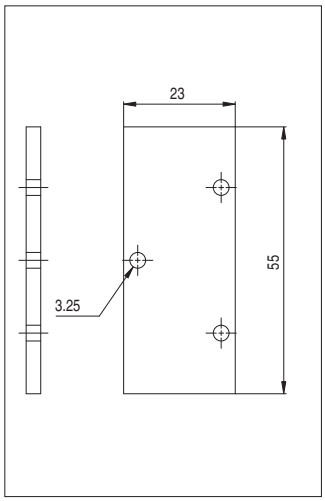

Multi-position sub-base

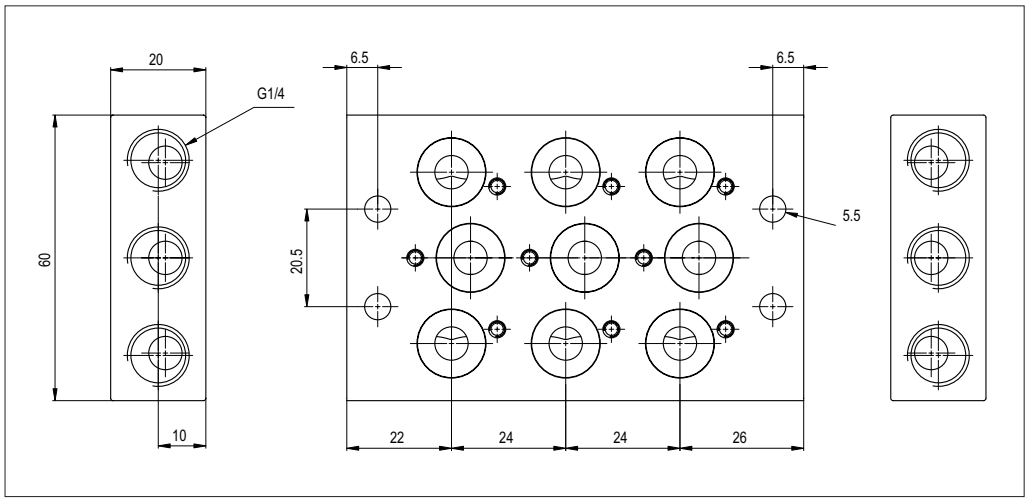

Valves series A1

1/4”, 3/2, electrically operated

Executions

Version	Symbol	Code	Item
3/2 NC	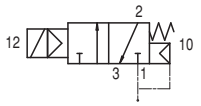	034025	A1E230
3/2 NO	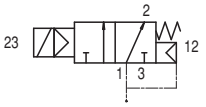	034040	A1E231
3/2 solenoid/solenoid	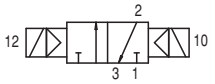	034024	A1E232
3/2 NC external air pilot	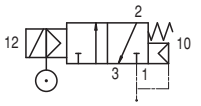	034039	A1K230
3/2 solenoid/solenoid, external air pilot	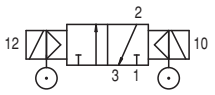	034023	A1K232

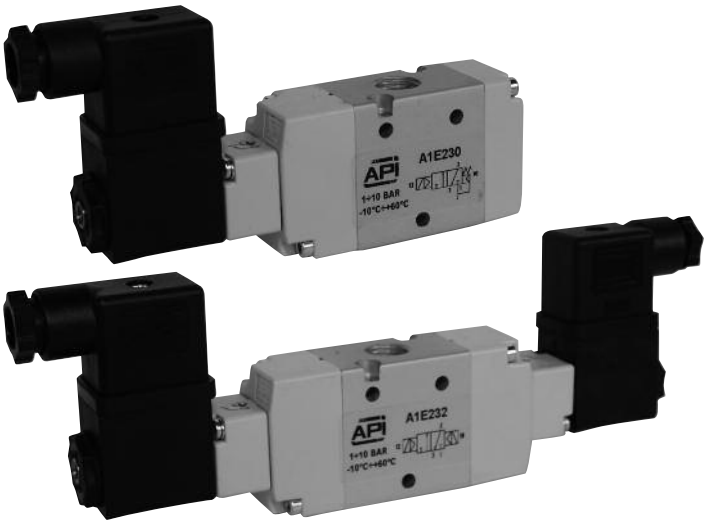

Series of spool valves, with static seals, high flow, for panel or sub-base mounting.
Coils and connectors are to be ordered separately.

For the coils type ASA12... see page 2.200.1
For the connectors type A122... see page 2.210.20
For the sub-bases type A1B2... see page 2.85.1

On request, they can be supplied according Directive 94/9/EC - **ATEX**
CE Ex **II 2 GDc T5**

Code key

Series	Actuation	Size	Function
A1	E = electrical K = electrical with external air pilot	1 = 1/8” 2 = 1/4	30 = 3/2 NC 31 = 3/2 NO 32 = 3/2 solenoid/solenoid 50 = 5/2 solenoid/spring 51 = 5/2 solenoid/solenoid 70 = 5/3 CC 71 = 5/3 CO 72 = 5/3 CP

Technical data

Fluid	Compressed filtered air with or without lubrication. Lubrication, if be used, must be continous.	
Pressure range	1 ÷ 10 bar	
Temperature range	-10°C ÷ +60°C	
Orifice	8 mm	
Flow	1.100 Nl/min at 6 bar with ΔP 1 bar	
Minimum piloting pressure	1,5 bar	Minimum external air pressure: 1,5 bar
Mounting	In any position	
Manual override	Two stable positions	
Response time	Energising:	De-energising:
Materials	Body: Aluminium Heads: Plastic Spool: Chemical nickel plated aluminium Distancers: Plastic Seals: Nitrile rubber (NBR)	

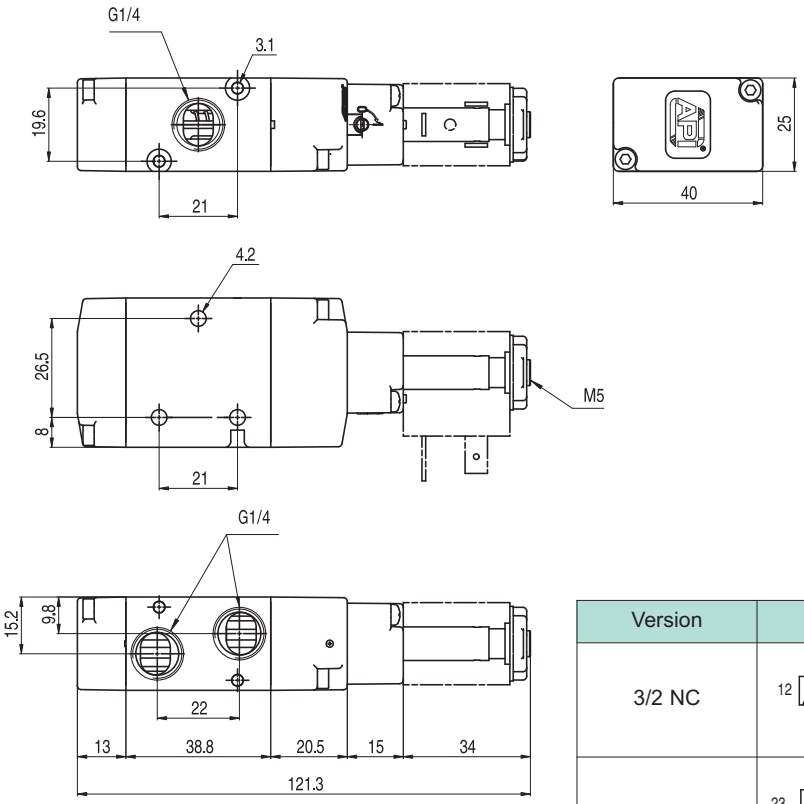

Version	Symbol	Code	Item
3/2 NC	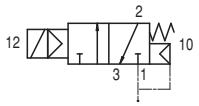	034025	A1E230
3/2 NO	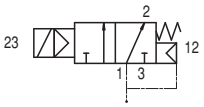	034040	A1E231

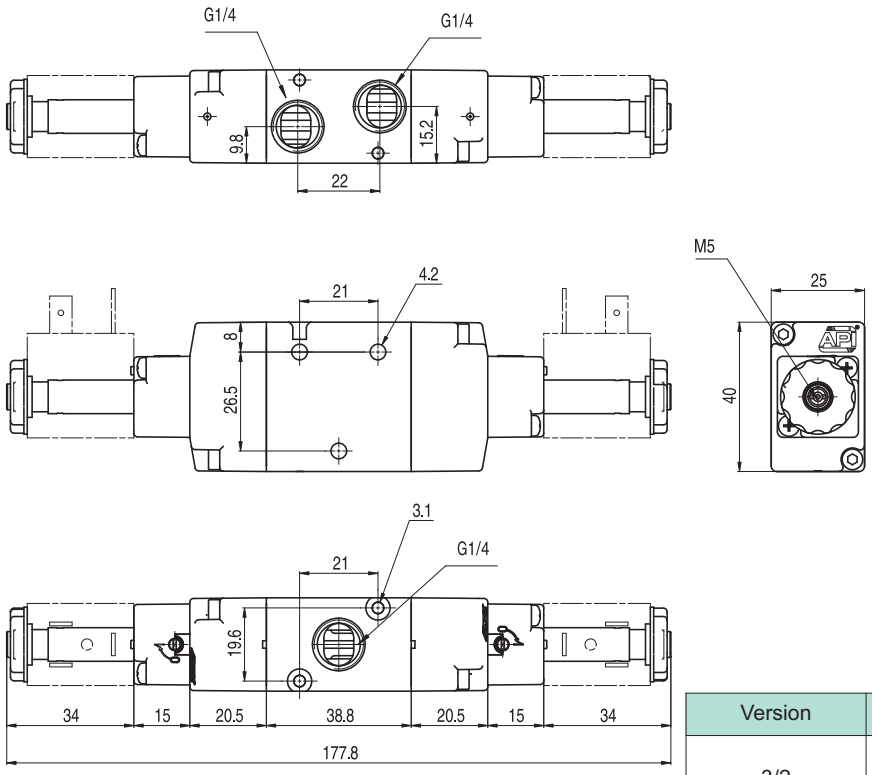

Version	Symbol	Code	Item
3/2 solenoid/solenoid	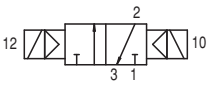	034024	A1E232

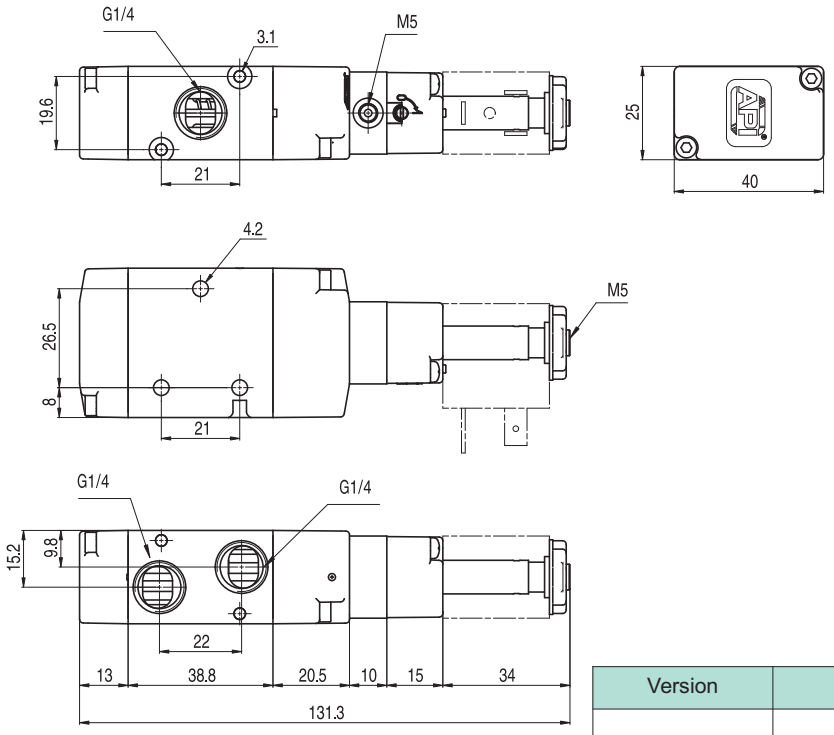

Version	Symbol	Code	Item
3/2 NC external air pilot	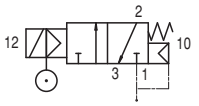	034039	A1K230

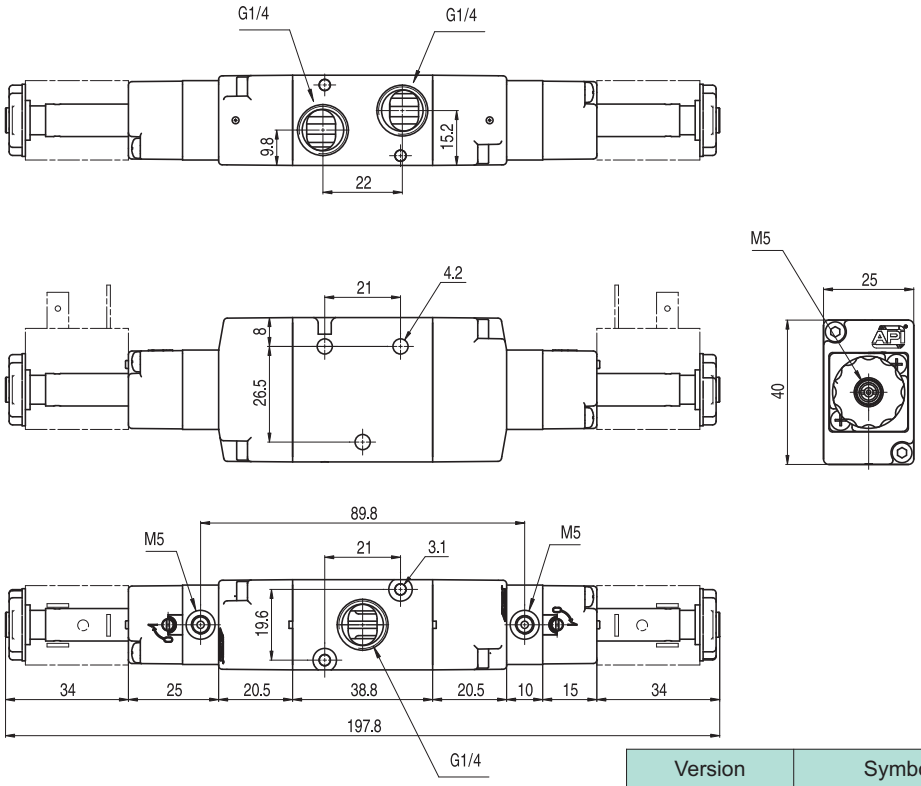

Version	Symbol	Code	Item
3/2 solenoid/solenoid, external air pilot	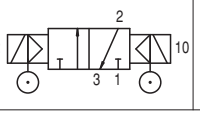	034023	A1K232

Executions

Version	Symbol	Code	Item
5/2 solenoid/spring	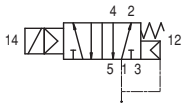	034111	A1E250
5/2 solenoid/solenoid	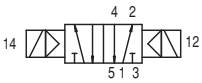	034121	A1E251
5/3 with closed centres	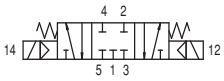	034131	A1E270
5/3 with open centres	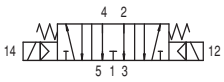	034133	A1E271
5/3 with pressurised centres	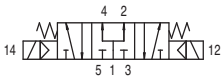	034132	A1E272
5/2 solenoid/spring, external air pilot	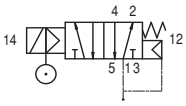	034035	A1K250
5/2 solenoid/solenoid, external air pilot	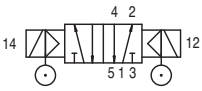	034034	A1K251
5/3 with closed centres, external air pilot	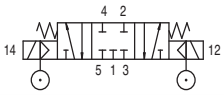	034037	A1K270
5/3 with open centres, external air pilot	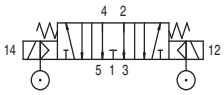	034038	A1K271
5/3 with pressurised centres, external air pilot	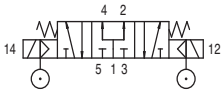	034036	A1K272

Series of spool valves, with static seals, high flow, for panel or sub-base mounting.
Coils and connectors are to be ordered separately.

For the coils type ASA12... see page 2.200.1
For the connectors type A122... see page 2.210.20
For the sub-bases type A1B2... see page 2.85.1

Code key

Series	Actuation	Size	Function
A1	E = electrical K = elettrical with external air pilot	1 = 1/8” 2 = 1/4”	30 = 3/2 NC 31 = 3/2 NO 32 = 3/2 solenoid/solenoid 50 = 5/2 solenoid/spring 51 = 5/2 solenoid/solenoid 70 = 5/3 CC 71 = 5/3 CO 72 = 5/3 CP

On request, they can be supplied according Directive 94/9/EC - **ATEX**
CE Ex **II 2 GDc T5**

Technical data

Fluid	Compressed filtered air with or without lubrication. Lubrication, if be used, must be continous.	
Pressure range	1 ÷ 10 bar	5/3 = 2,5 ÷ 10 bar
Temperature range	-10°C ÷ +60°C	
Orifice	8 mm	
Flow	1.100 Nl/min at 6 bar with ΔP 1 bar	
Minimum piloting pressure	1,5 bar	Minimum external air pressure: 1,5 bar
Mounting	In any position	
Manual override	Two stable positions	
Response time	Energising:	De-energising:
Materials	Body: Aluminium Heads: Plastic Spool: Chemical nickel plated aluminium Distancers: Plastic Seals: Nitrile rubber (NBR)	

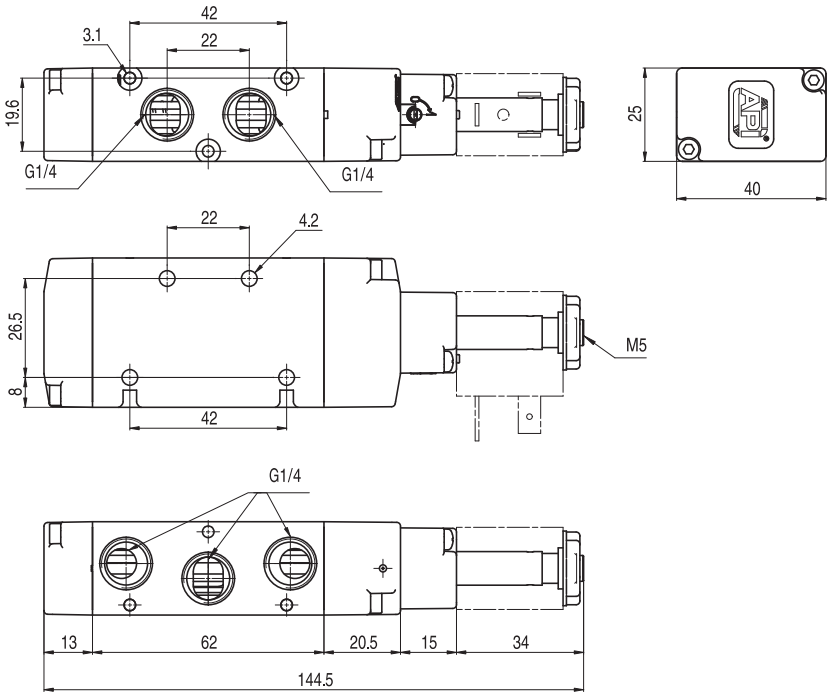

Version	Symbol	Code	Item
5/2 solenoid/spring	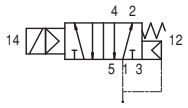	034111	A1E250

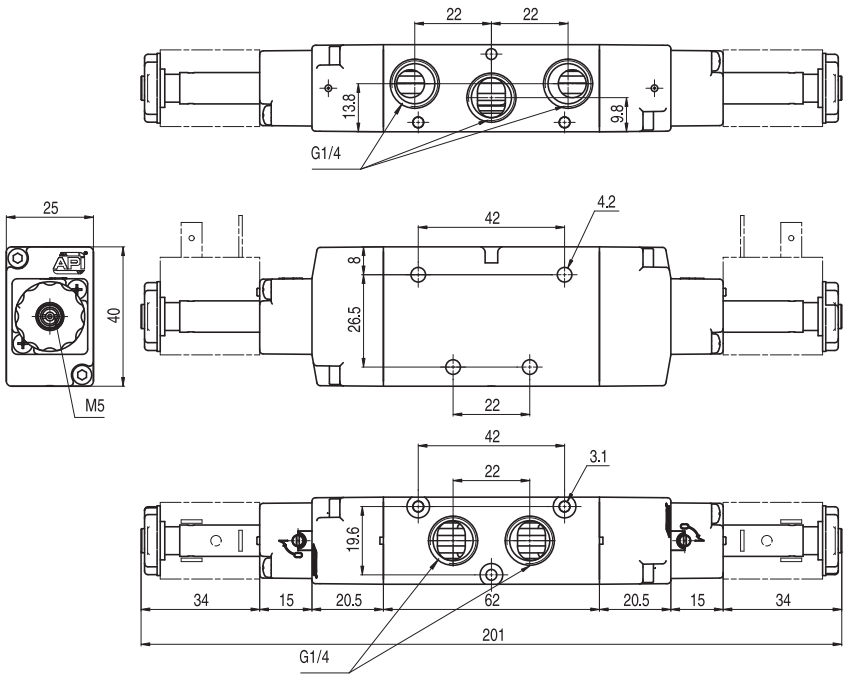

Version	Symbol	Code	Item
5/2 solenoid/solenoid	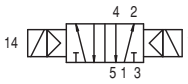	034121	A1E251

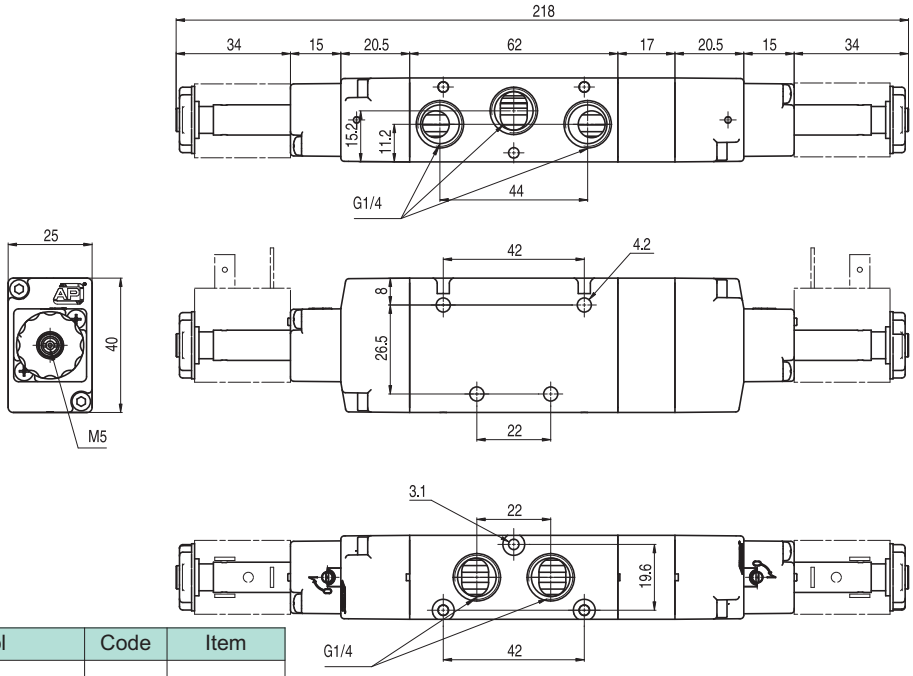

Version	Symbol	Code	Item
5/3 with closed centres	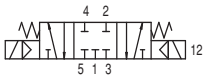	034131	A1E270
5/3 with open centres	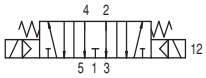	034133	A1E271
5/3 with pressurised centres	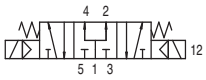	034132	A1E272

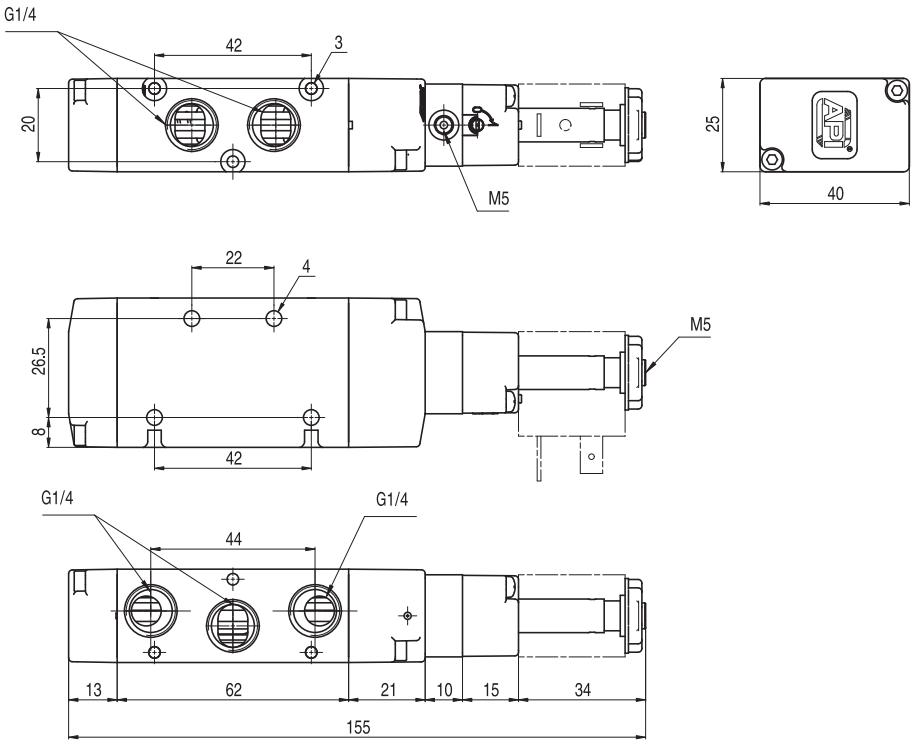

Version	Symbol	Code	Item
5/2 solenoid/spring, external air pilot	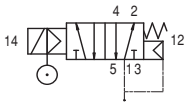	034035	A1K250

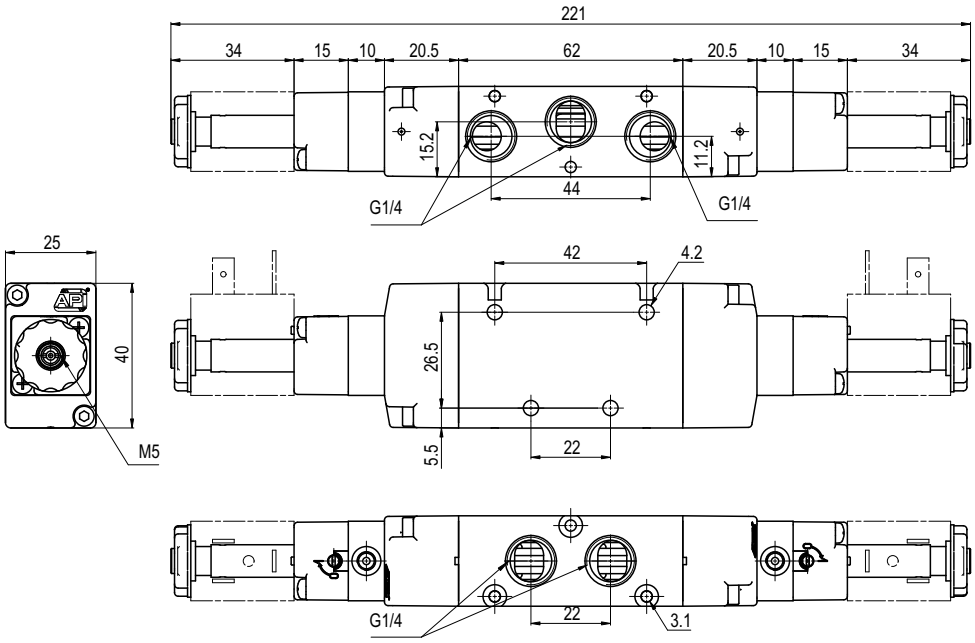

Version	Symbol	Code	Item
5/2 solenoid/solenoid, external air pilot	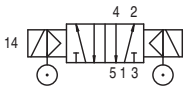	034034	A1K251

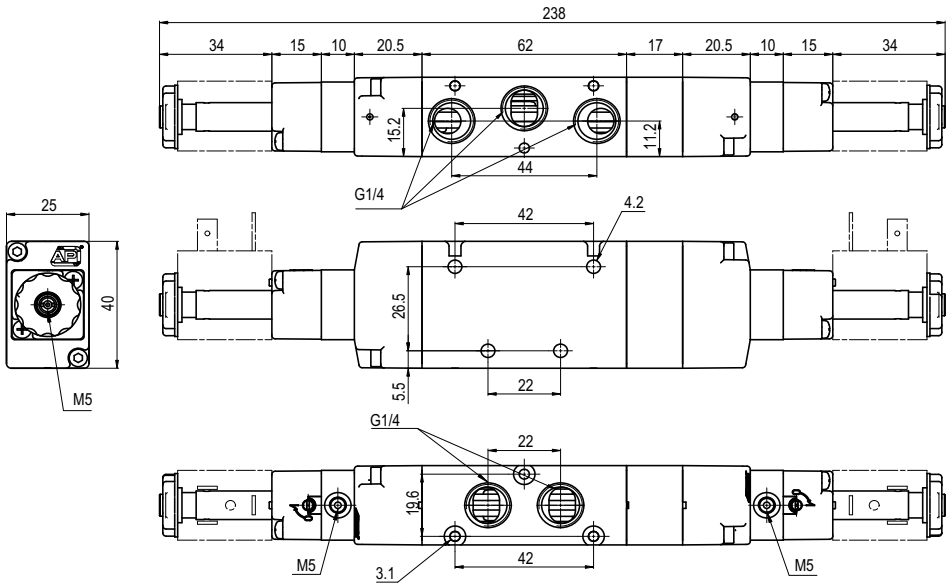

Version	Symbol	Code	Item
5/3 with closed centres, external air pilot	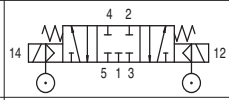	034037	A1K270
5/3 with open centres, external air pilot	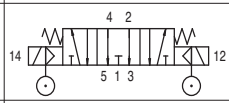	034038	A1K271
5/3 with pressurised centres, external air pilot	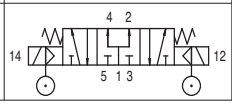	034036	A1K272

Executions

Version	Symbol	Code	Item
3/2 NC	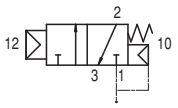	034027	A1P230
3/2 NO	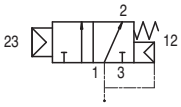	034054	A1P231
3/2 pilot/pilot	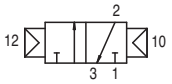	034026	A1P232
3/2 pilot/pilot, differential	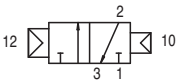	034055	A1P233

Series of spool valves, with static seals, high flow, for panel or sub-base mounting.
For the sub-bases type A1B2... see page 2.85.1

On request, they can be supplied according Directive 94/9/EC - **ATEX**
CE Ex **II 2 GDc T5**

Code key

Series	Actuation	Size	Function
A1	P = pneumatic	1 = 1/8” 2 = 1/4”	30 = 3/2 NC 31 = 3/2 NO 32 = 3/2 pilot/pilot 33 = 3/2 pilot/pilot, differential 50 = 5/2 pilot/spring 51 = 5/2 pilot/pilot 52 = 5/2 pilot/pilot, differential 70 = 5/3 CC 71 = 5/3 CO 72 = 5/3 CP

Technical data

Fluid	Compressed filtered air with or without lubrication. Lubrication, if be used, must be continous.	
Pressure range	1 ÷ 10 bar	
Temperature range	-10°C ÷ +60°C	
Orifice	8 mm	
Flow	1.100 Nl/min at 6 bar with ΔP 1 bar	
Minimum piloting pressure	1,5 bar	
Mounting	In any position	
Response time	Energising:	De-energising:
Materials	Body: Aluminium Heads: Plastic Spool: Chemical nickel plated aluminium Distancers: Plastic Seals: Nitrile rubber (NBR)	

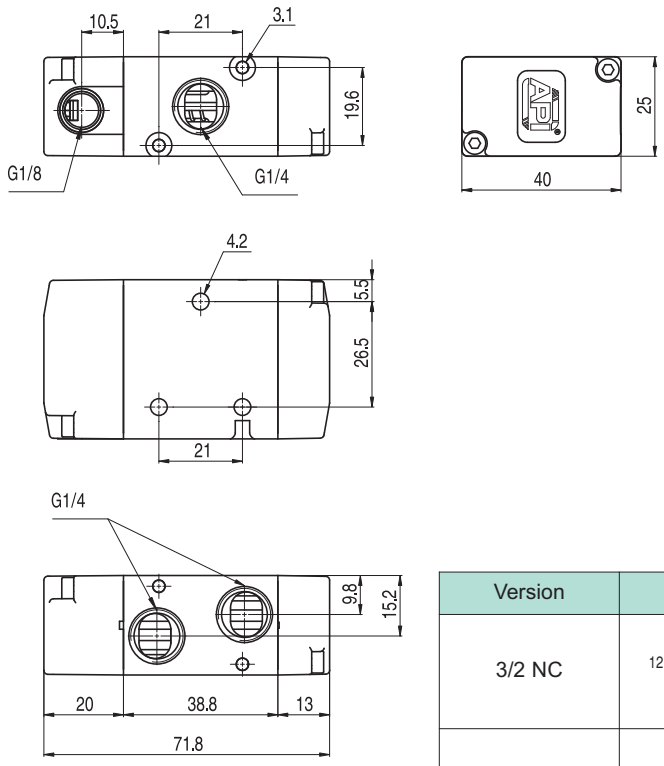

Version	Symbol	Code	Item
3/2 NC	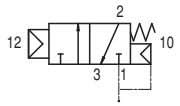	034027	A1P230
3/2 NO	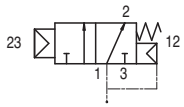	034054	A1P231

Version	Symbol	Code	Item
3/2 pilot/pilot	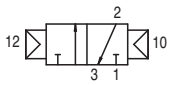	034026	A1P232
3/2 pilot/pilot, differential	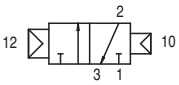	034055	A1P233

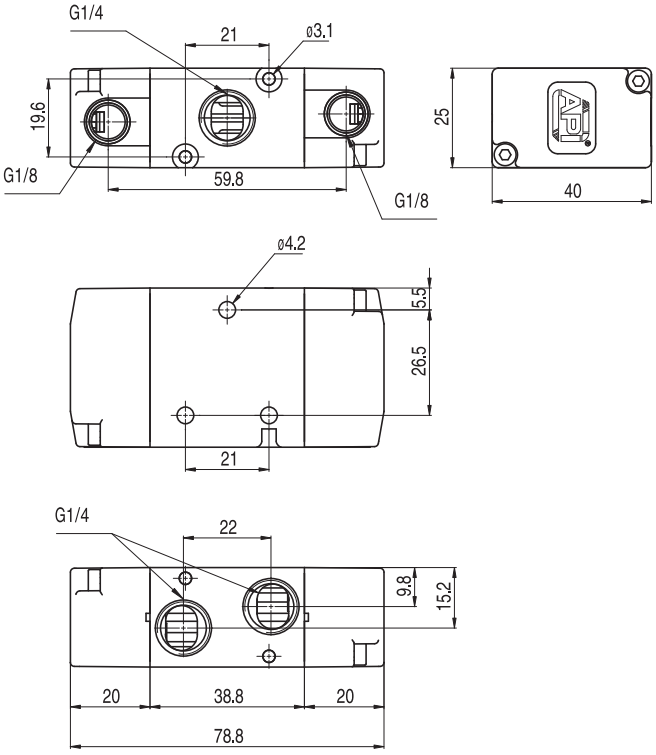

Executions

Version	Symbol	Code	Item
5/2 pilot/spring	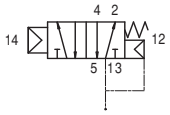	034101	A1P250
5/2 pilot/pilot	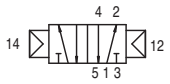	034102	A1P251
5/2 pilot/pilot, differential	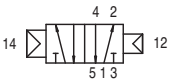	034056	A1P252
5/3 with closed centres	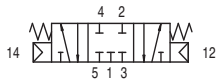	034029	A1P270
5/3 with open centres	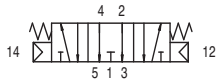	034030	A1P271
5/3 with pressurised centres	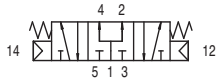	034028	A1P272

On request, they can be supplied according Directive 94/9/EC - **ATEX**
CE Ex II 2 GDc T5

Series of spool valves, with static seals, high flow, for panel or sub-base mounting.
For the sub-bases type A1B2... see page 2.85.1

Code key

Series	Actuation	Size	Function
A1	P = pneumatic	1 = 1/8” 2 = 1/4”	30 = 3/2 NC 31 = 3/2 NO 32 = 3/2 pilot/pilot 33 = 3/2 pilot/pilot, differential 50 = 5/2 pilot/spring 51 = 5/2 pilot/pilot 52 = 5/2 pilot/pilot, differential 70 = 5/3 CC 71 = 5/3 CO 72 = 5/3 CP

Technical data

Fluid	Compressed filtered air with or without lubrication. Lubrication, if be used, must be continous.	
Pressure range	1 ÷ 10 bar	5/3 = 2,5 ÷ 10 bar
Temperature range	-10°C ÷ +60°C	
Orifice	8 mm	
Flow	1.100 Nl/min at 6 bar with ΔP 1 bar	
Minimum piloting pressure	1,5 bar	
Mounting	In any position	
Response time	Energising:	De-energising:
Materials	Body: Aluminium Heads: Plastic Spool: Chemical nickel plated aluminium Distancers: Plastic Seals: Nitrile rubber (NBR)	

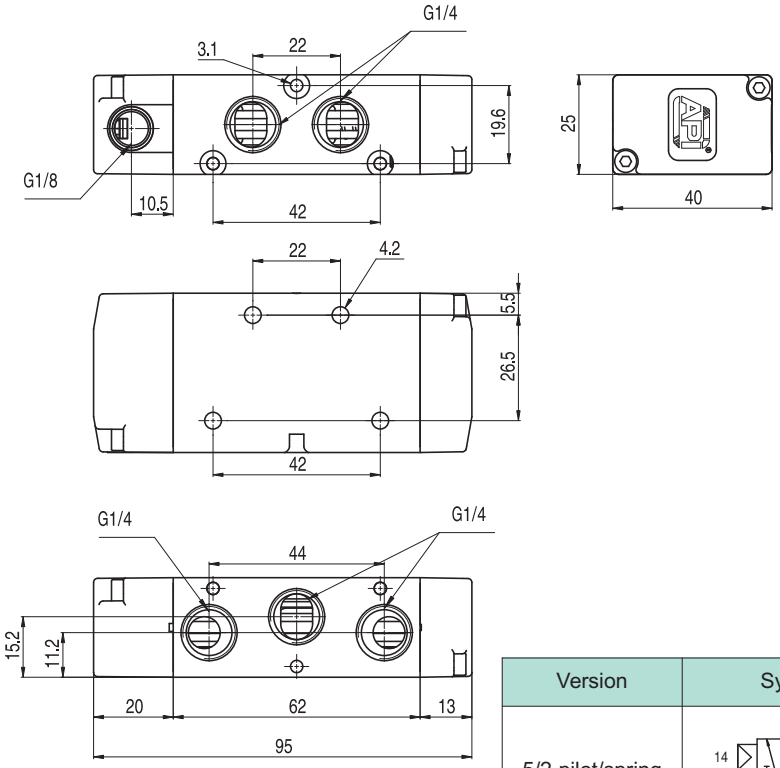

Version	Symbol	Code	Item
5/2 pilot/spring	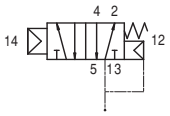	034101	A1P250

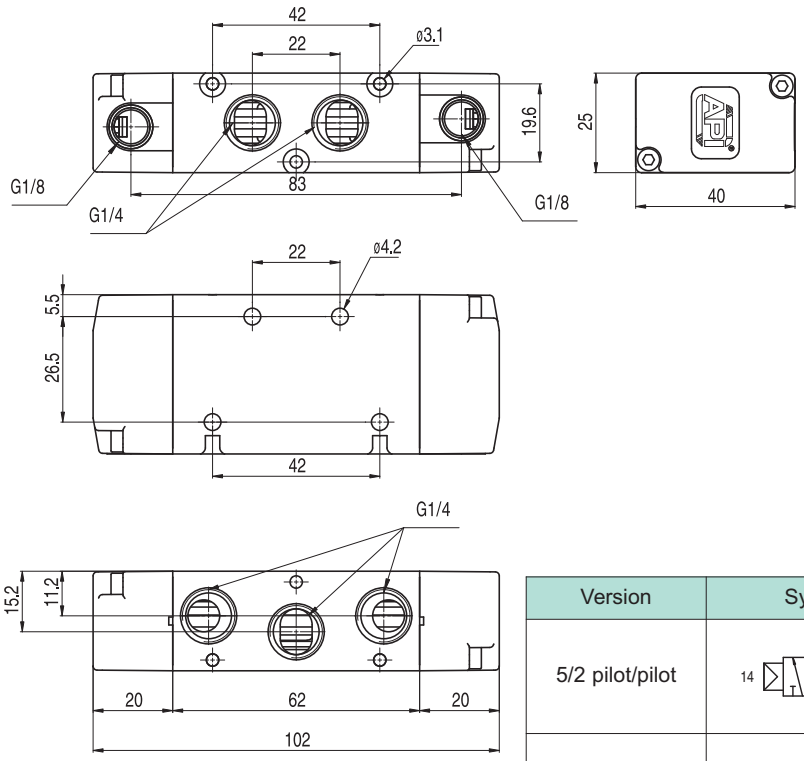

Version	Symbol	Code	Item
5/2 pilot/pilot	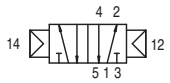	034102	A1P251
5/2 pilot/pilot, differential	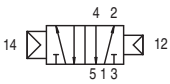	034056	A1P252

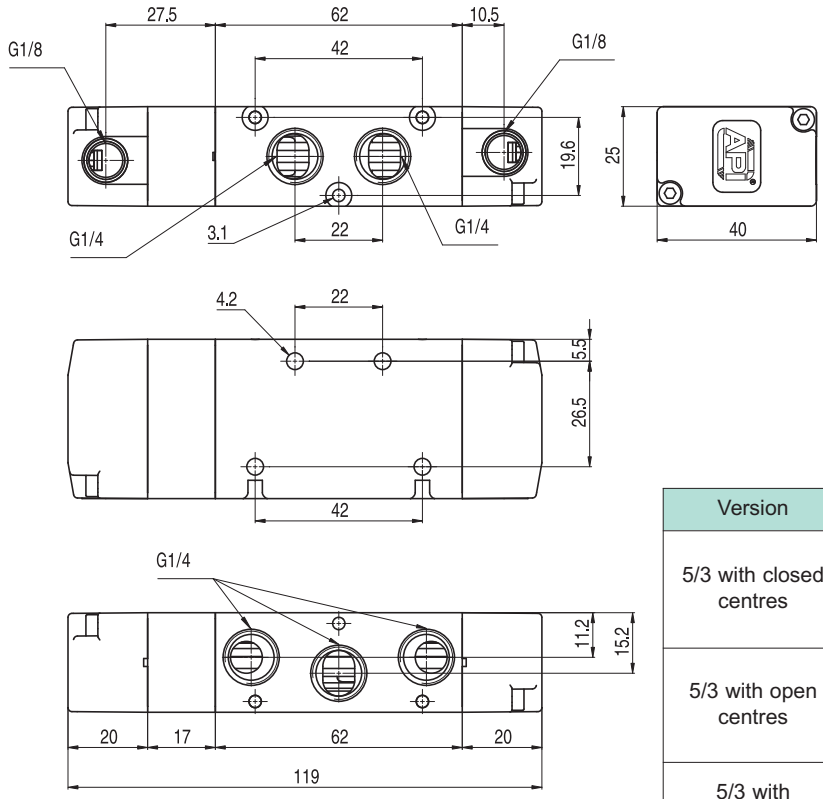

Version	Symbol	Code	Item
5/3 with closed centres	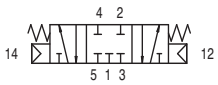	034029	A1P270
5/3 with open centres	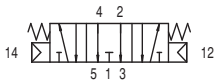	034030	A1P271
5/3 with pressurised centres	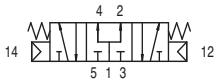	034028	A1P272

2

Executions		
Version	Codie	Item
2 positions	034141	A1B202
3 positions	034142	A1B203
4 positions	034143	A1B204
5 positions	034144	A1B205
6 positions	034145	A1B206
7 positions	034146	A1B207
8 positions	034147	A1B208
9 positions	034148	A1B209
10 positions	034149	A1B210
blanking plate	034150	A1C2
plug	034151	A1T2

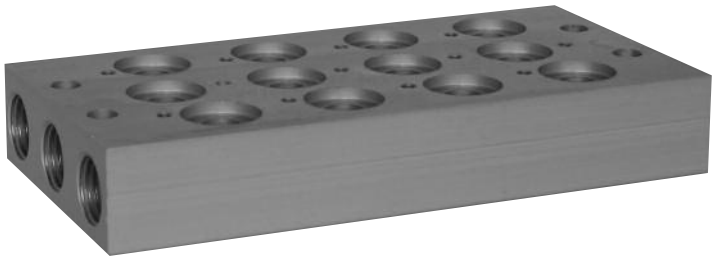

Multi-position sub-bases with fixed position, for valves series A1, 3 and 5 ways. 2 fixing screws for each position and the relevant seals are included in the base kit.
Spare positions can be blanked with plate.

Material:	Profiled anodised aluminium

On request, they can be supplied according Directive 94/9/EC - **ATEX**
CE Ex **II 2 GDc T5**

Code key

Series	Product	Size	N° positions
A1	B = base C = blanking plate T = plug	1 = 1/8” 2 = 1/4”	from 02 to 10

Plug

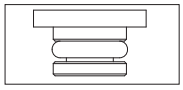

Blanking plate

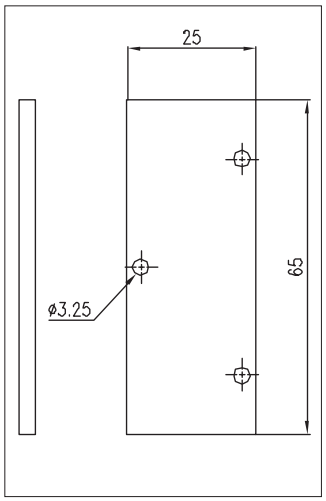

Multi-position sub-base

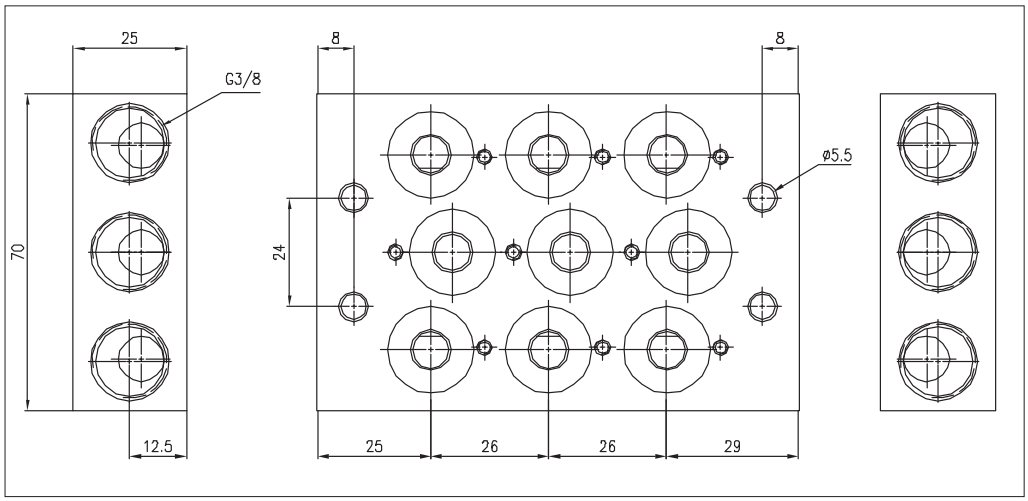

Executions

Version	Symbol	Code	Item
3/2 NC solenoid/spring	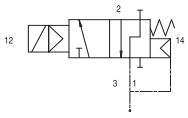	034059	A1NE230
3/2 solenoid/solenoid	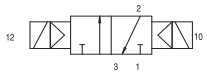	034060	A1NE232
5/2 solenoid/spring	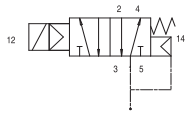	034057	A1NE250
5/2 solenoid/solenoid	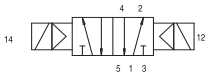	034058	A1NE251

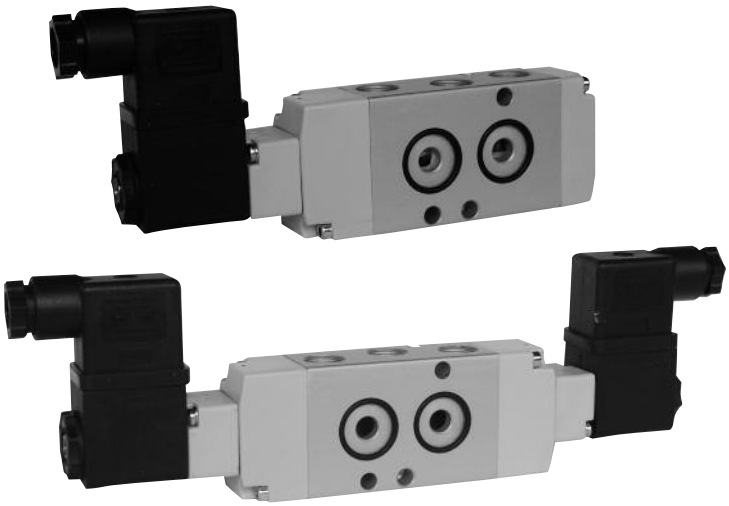

Series of spool valves, with static seals, high flow, for mounting on NAMUR interface.
Coils and connectors are to be ordered separately.
For the coils type ASA12... see page 2.200.1
For the connectors type A122... see page 2.210.20

On request, they can be supplied according Directive 94/9/EC - **ATEX**
CE Ex **II 2 GDc T5**

Code key

Series	Actuation	Size	Function
A1	NE= NAMUR electrical	2 = 1/4”	30 = 3/2 NC 32 = 3/2 solenoid/solenoid 50 = 5/2 solenoid/spring 51 = 5/2 solenoid/solenoid

Technical data

Fluid	Compressed filtered air with or without lubrication. Lubrication, if be used, must be continous.	
Pressure range	1 ÷ 10 bar	
Temperature range	-10°C ÷ +60°C	
Orifice	7 mm	
Flow	1.000 Nl/min at 6 bar with ΔP 1 bar	
Minimum piloting pressure	1,5 bar	Minimum external air pressure: 1,5 bar
Mounting	In any position	
Manual override	Two stable positions	
Response time	Energising:	De-energising:
Materials	Body: Die-cast painted aluminium Heads: Plastic Spool: Chemical nickel plated aluminium Distancers: Plastic Seals: Nitrile rubber (NBR)	

Version	Symbol	Code	Item
3/2 NC solenoid/spring	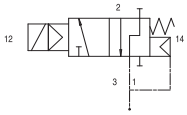	034059	A1NE230

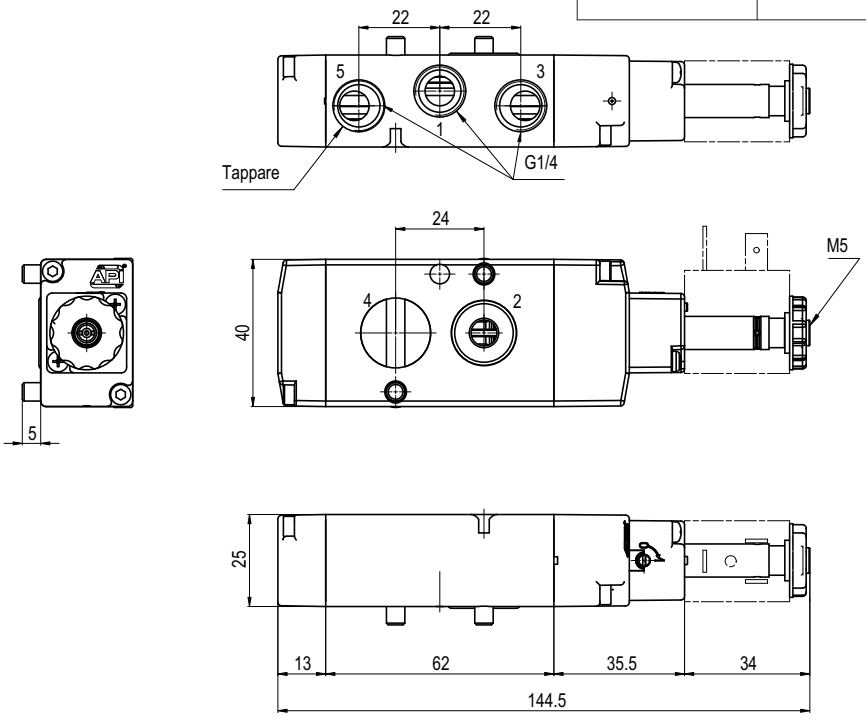

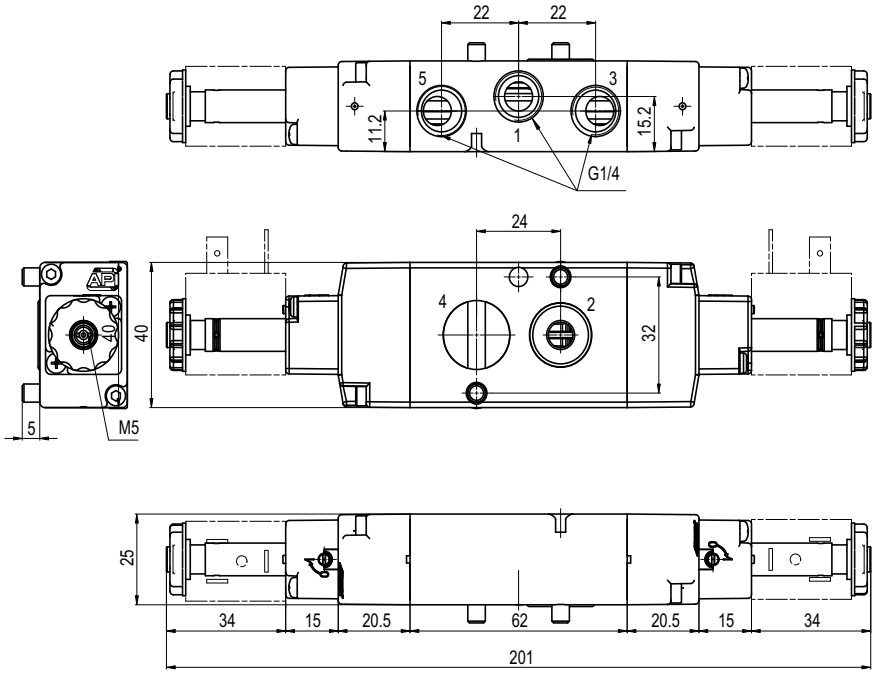

Version	Symbol	Code	Item
3/2 solenoid/solenoid	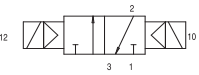	034060	A1NE232

Version	Symbol	Code	Item
5/2 solenoid/spring	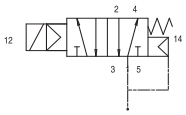	034057	A1NE250

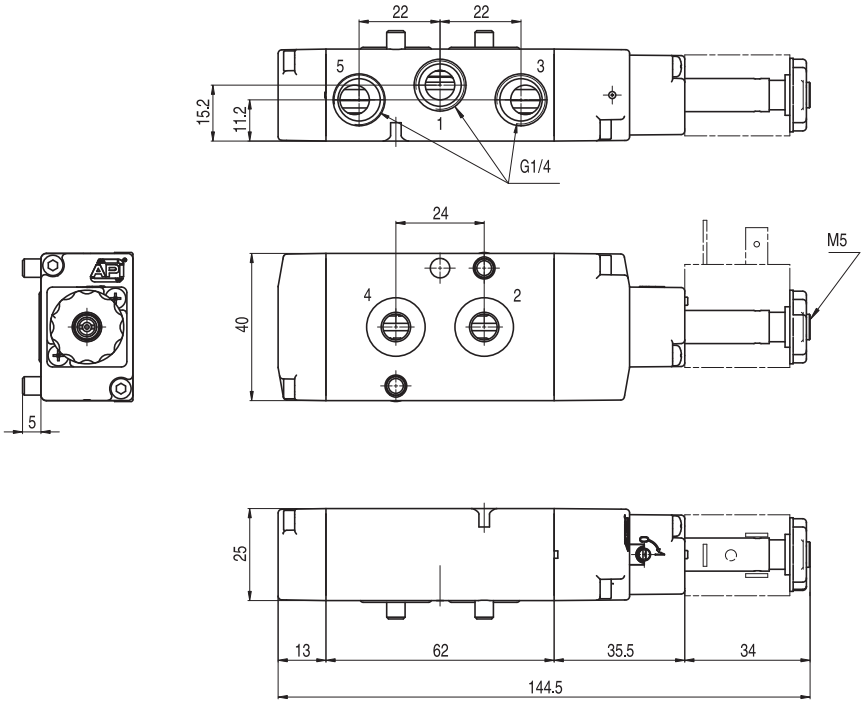

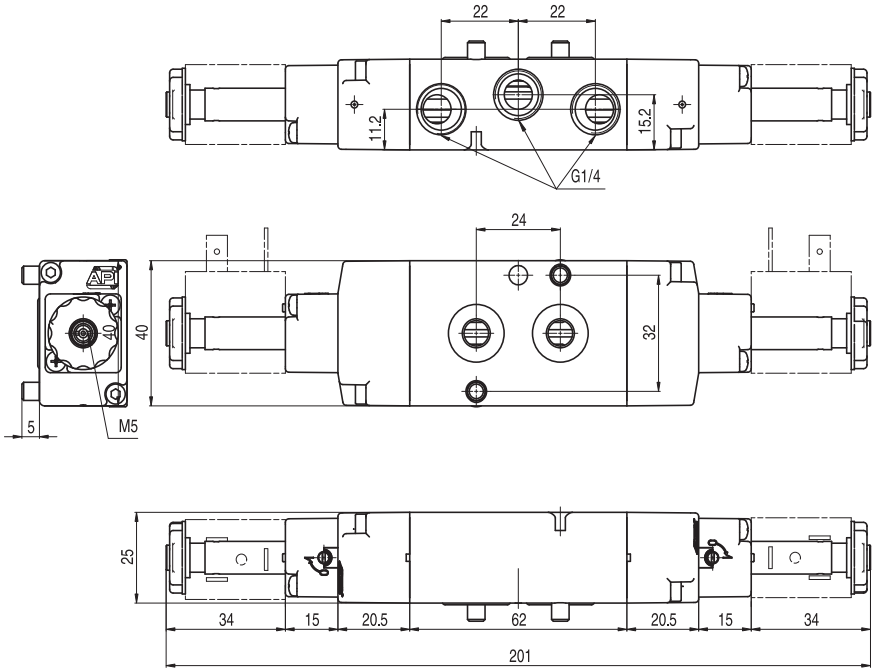

Version	Symbol	Code	Item
5/2 solenoid/solenoid	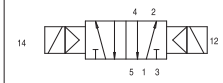	034058	A1NE251

Notes

Executions

Version	Symbol	Code	Item
3/2 NC	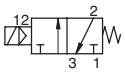	034113	A1E430
3/2 NO	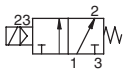	034122	A1E431
3/2 solenoid/solenoid	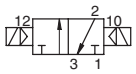	034123	A1E432
3/2 NC external air pilot	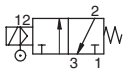	034137	A1K430
3/2 solenoid/solenoid, external air pilot	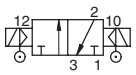	034158	A1K432

Series of spool valves, with static seals, high flow, for panel mounting.
Coils and connectors are to be ordered separately.
For the coils type ASA12.../ASA2... see page 2.200.1
For the connectors type A122... see page 2.210.20

2

On request, they can be supplied according Directive 94/9/EC - **ATEX**
CE Ex **II 2 GDc T5**

Code key

Series	Actuation	Size	Function
A1	E = electrical K = electrical with external air pilot	1 = 1/8” 2 = 1/4 4 = 1/2”	30 = 3/2 NC 31 = 3/2 NO 32 = 3/2 solenoid/solenoid 50 = 5/2 solenoid/spring 51 = 5/2 solenoid/solenoid 70 = 5/3 CC 71 = 5/3 CO 72 = 5/3 CP

Technical data

Fluid	Compressed filtered air with or without lubrication. Lubrication, if be used, must be continous.		
Pressure range	0 ÷ 10 bar		
Temperature range	-10°C ÷ +60°C		
Orifice	15 mm		
Flow	2900 Nl/min at 6 bar with ΔP 1 bar		
Minimum piloting pressure	Monostable: 2.5 bar	Bistable: 1 bar	3 positions: 2.5 bar
Mounting	In any position		
Manual override	Bistable on solenoid pilot - Monostable on valve body		
Materials	Body: Aluminium Heads: Aluminium Spool: Aluminium Distancers: Aluminium Seals: NBR		

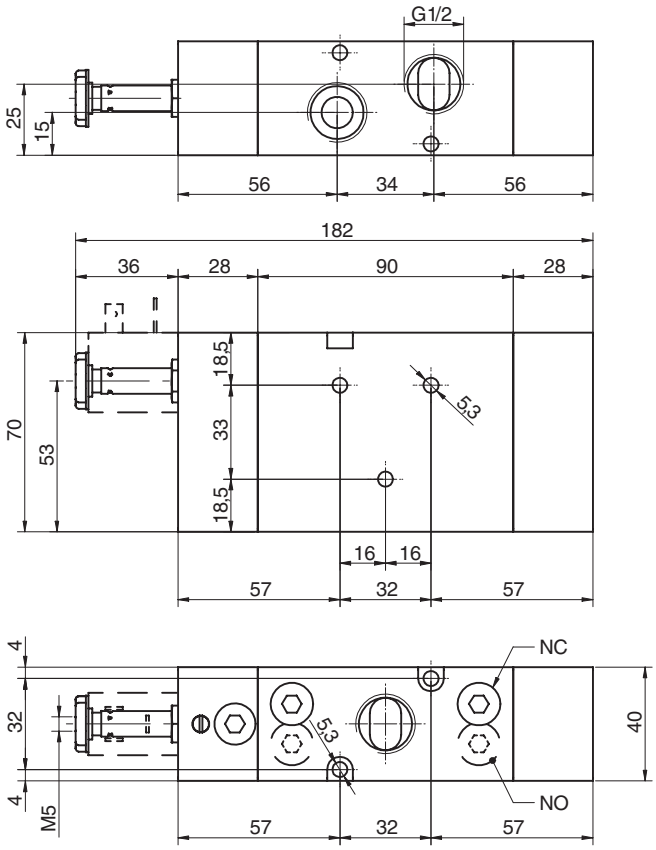

Version	Symbol	Code	Item
3/2 NC	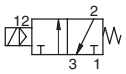	034113	A1E430
3/2 NA	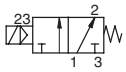	034122	A1E431
3/2 NC external air pilot	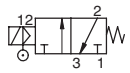	034137	A1K430

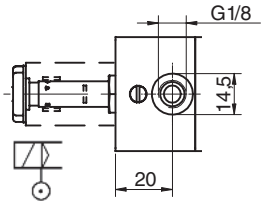

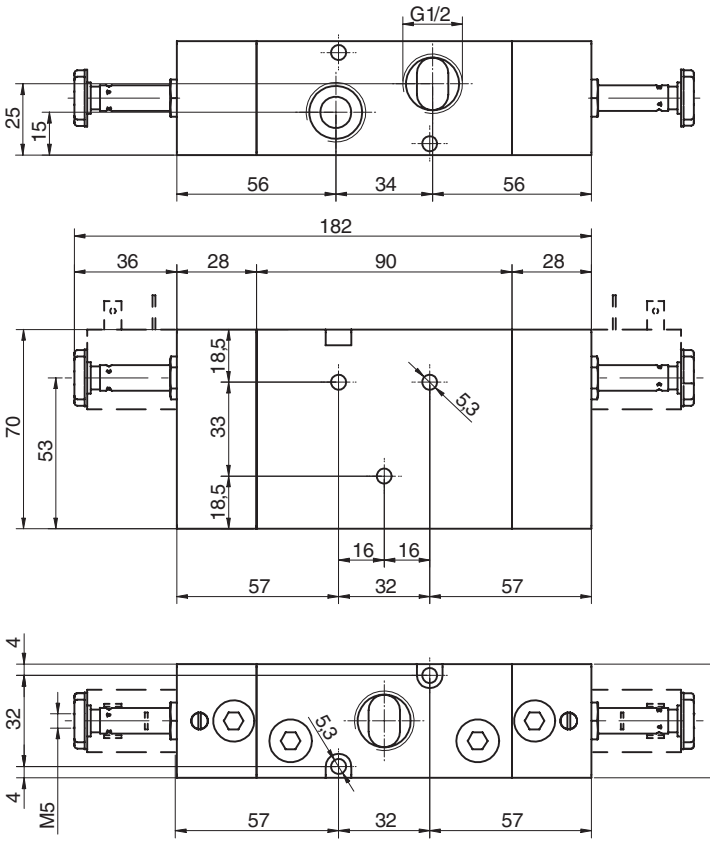

Version	Symbol	Code	Item
3/2 solenoid/solenoid	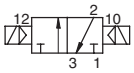	034123	A1E432
3/2 solenoid/solenoid, external air pilot	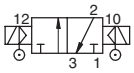	034158	A1K432

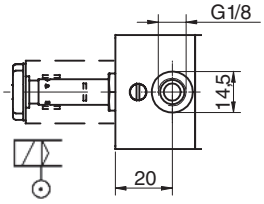

Valves series A1

1/2”, 5/2 - 5/3, electrically operated

Executions

Version	Symbol	Code	Item
5/2 solenoid/spring	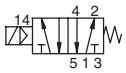	034114	A1E450
5/2 solenoid/solenoid	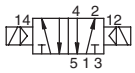	034115	A1E451
5/2 solenoid/solenoid differential	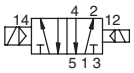	034139	A1E452
5/3 with closed centres	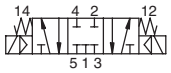	034124	A1E470
5/3 with open centres	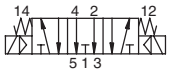	034125	A1E471
5/3 with pressurised centres	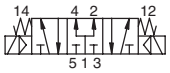	034126	A1E472
5/2 solenoid/spring external air pilot	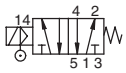	034138	A1K450
5/2 solenoid/solenoid external air pilot		034140	A1K451
5/3 with closed centres, external air pilot	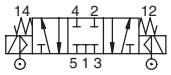	034159	A1K470
5/3 with open centres, external air pilot	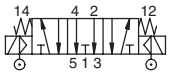	034160	A1K471
5/3 with presurised centres, external air pilot	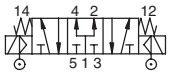	034161	A1K472

Series of spool valves, with static seals, high flow, for panel mounting.
Coils and connectors are to be ordered separately.
For the coils type ASA12.../ASA2... see page 2.200.1
For the connectors type A122... see page 2.210.20

Code key

Series	Actuation	Size	Function
A1	E = electrical K = elettrical with external air pilot	1 = 1/8” 2 = 1/4” 4 = 1/2”	30 = 3/2 NC 31 = 3/2 NO 32 = 3/2 solenoid/solenoid 50 = 5/2 solenoid/spring 51 = 5/2 solenoid/solenoid 52 = 5/2 solenoid/solenoid differential 70 = 5/3 CC 71 = 5/3 CO 72 = 5/3 CP

On request, they can be supplied according Directive 94/9/EC - **ATEX**
CE Ex **II 2 GDc T5**

Technical data

Fluid	Compressed filtered air with or without lubrication. Lubrication, if be used, must be continous.		
Pressure range	0 ÷ 10 bar		
Temperature range	-10°C ÷ +60°C		
Orifice	15 mm		
Flow	2900 Nl/min at 6 bar with ΔP 1 bar		
Minimum piloting pressure	Monostable: 2.5 bar	Bistable: 1 bar	3 positions: 2.5 bar
Mounting	In any position		
Pilot	Pilot in line		
Manual override	Bistable on solenoid pilot - Monostable on valve body		
Materials	Body: Aluminium Heads: Aluminium Spool: Aluminium Distancers: Aluminium Seals: NBR		

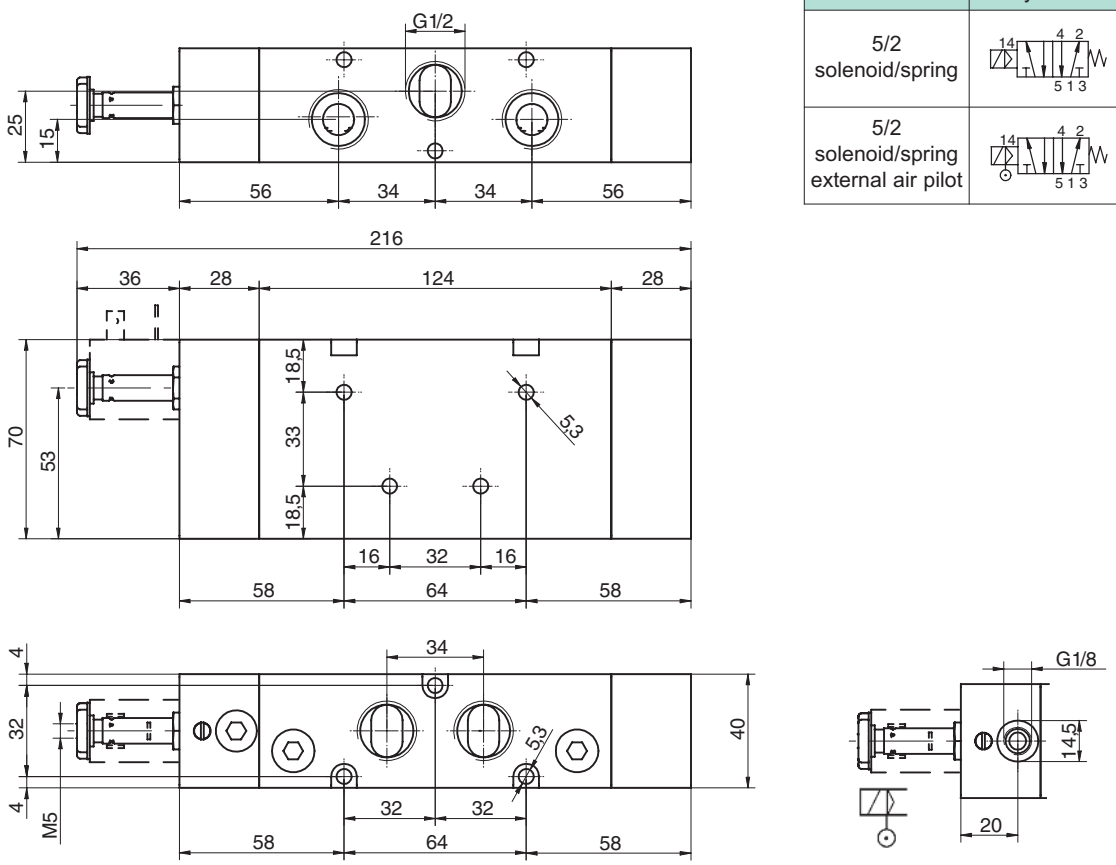

Version	Symbol	Code	Item
5/2 solenoid/spring		034114	A1E450
5/2 solenoid/spring external air pilot		034138	A1K450

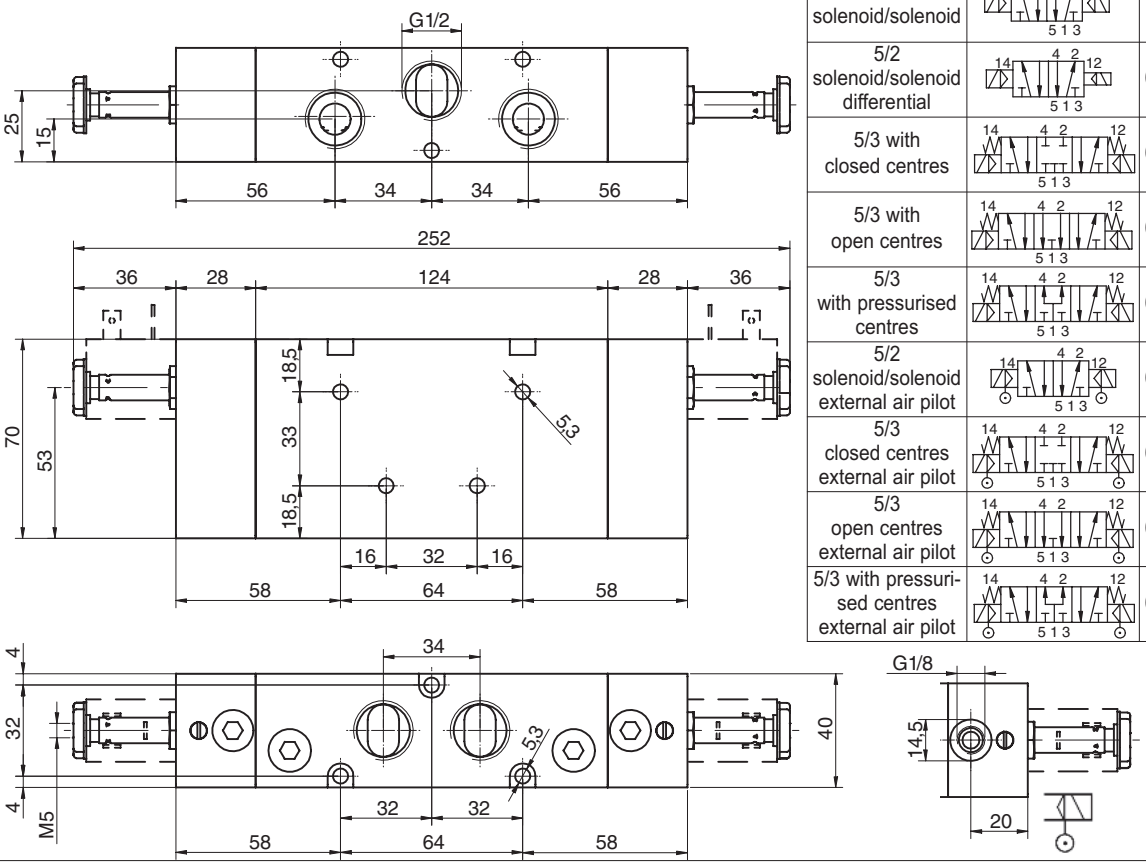

Versione	Simbolo	Codice	Articolo
5/2 solenoid/solenoid	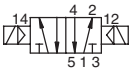	034115	A1E451
5/2 solenoid/solenoid differential		034139	A1E452
5/3 with closed centres		034124	A1E470
5/3 with open centres		034125	A1E471
5/3 with pressurised centres		034126	A1E472
5/2 solenoid/solenoid external air pilot		034140	A1K451
5/3 closed centres external air pilot		034159	A1K470
5/3 open centres external air pilot		034160	A1K471
5/3 with pressurised centres external air pilot		034161	A1K472

Esecuzioni

Version	Symbol	Code	Item
3/2 NC	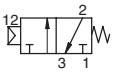	034116	A1P430
3/2 NO	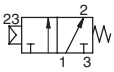	034127	A1P431
3/2 pilot/pilot	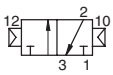	034128	A1P432

On request, they can be supplied according Directive 94/9/EC - **ATEX**
CE Ex **II 2 GDc T5**

Series of spool valves, with static seals, high flow, for panel mounting.

Code key

Series	Actuation	Size	Function
A1	P = pneumatic	1 = 1/8” 2 = 1/4” 4 = 1/2”	30 = 3/2 NC 31 = 3/2 NO 32 = 3/2 pilot/pilot 33 = 3/2 pilot/pilot differential 50 = 5/2 pilot/spring 51 = 5/2 pilot/pilot 52 = 5/2 pilot/pilot differential 70 = 5/3 CC 71 = 5/3 CO 72 = 5/3 CP

Technical data

Fluid	Compressed filtered air with or without lubrication. Lubrication, if be used, must be continous.		
Pressure range	0 ÷ 10 bar		
Temperature range	-10°C ÷ +60°C		
Orifice	15 mm		
Flow	2900 Nl/min at 6 bar with ΔP 1 bar		
Minimum piloting pressure	Monostable: 2.5 bar	Bistable: 1 bar	3 positions: 2.5 bar
Mounting	In any position		
Manual override	Bistable on solenoid pilot - Monostable on valve body		
Materials	Body: Aluminium Heads: Aluminium Spool: Aluminium Distancers: Aluminium Seals: NBR		

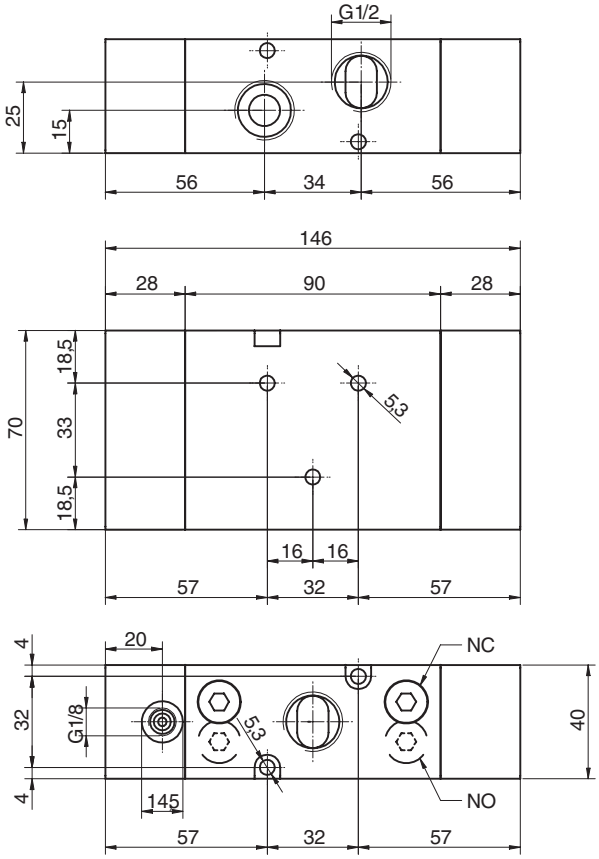

Version	Symbol	Code	Item
3/2 NC	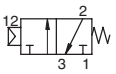	034116	A1P430
3/2 NO	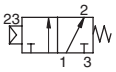	034127	A1P431

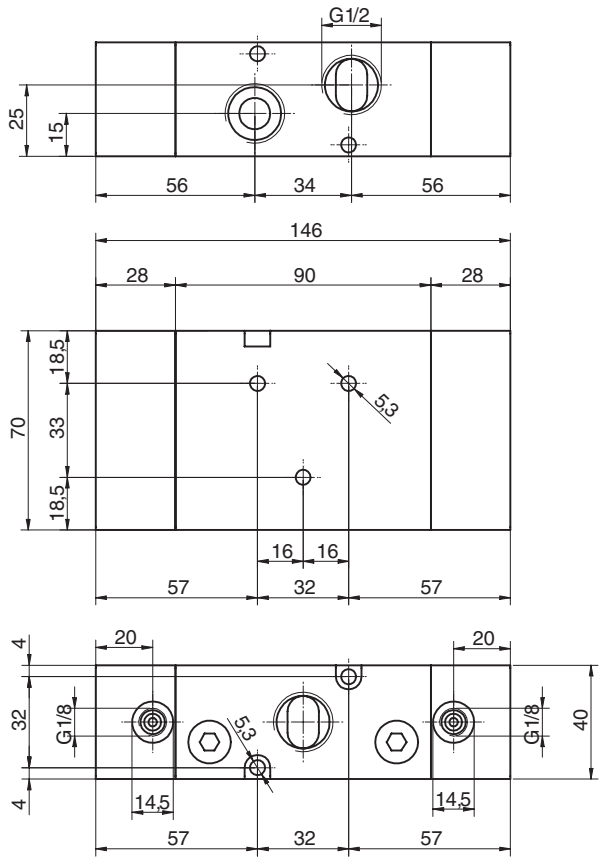

Version	Symbol	Code	Item
3/2 pilot/pilot	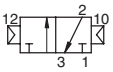	034128	A1P432

Executions

Version	Symbol	Code	Item
5/2 pilot/spring	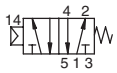	034117	A1P450
5/2 pilot/pilot	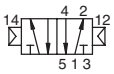	034118	A1P451
5/2 pilot/pilot differential	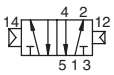	034136	A1P452
5/3 with closed centres	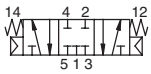	034129	A1P470
5/3 with open centres	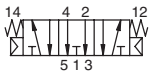	034130	A1P471
5/3 with pressurised centres	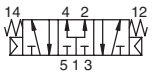	034135	A1P472

Series of spool valves, with static seals, high flow, for panel mounting.

On request, they can be supplied according Directive 94/9/EC - **ATEX**
CE Ex II 2 GDc T5

Code key

Series	Actuation	Size	Function
A1	P = pneumatic	1 = 1/8” 2 = 1/4” 4 = 1/2”	30 = 3/2 NC 31 = 3/2 NO 32 = 3/2 pilot/pilot 33 = 3/2 pilot/pilot differential 50 = 5/2 pilot/spring 51 = 5/2 pilot/pilot 52 = 5/2 pilot/pilot differential 70 = 5/3 CC 71 = 5/3 CO 72 = 5/3 CP

Technical data

Fluid	Compressed filtered air with or without lubrication. Lubrication, if be used, must be continous.		
Pressure range	0 ÷ 10 bar		
Temperature range	-10°C ÷ +60°C		
Orifice	15 mm		
Flow	2900 Nl/min at 6 bar with ΔP 1 bar		
Minimum piloting pressure	Monostable: 2.5 bar	Bistable: 1 bar	3 positions: 2.5 bar
Mounting	In any position		
Manual override	Bistable on solenoid pilot - Monostable on valve body		
Materials	Body: Aluminium Heads: Aluminium Spool: Aluminium Distancers: Aluminium Seals: NBR		

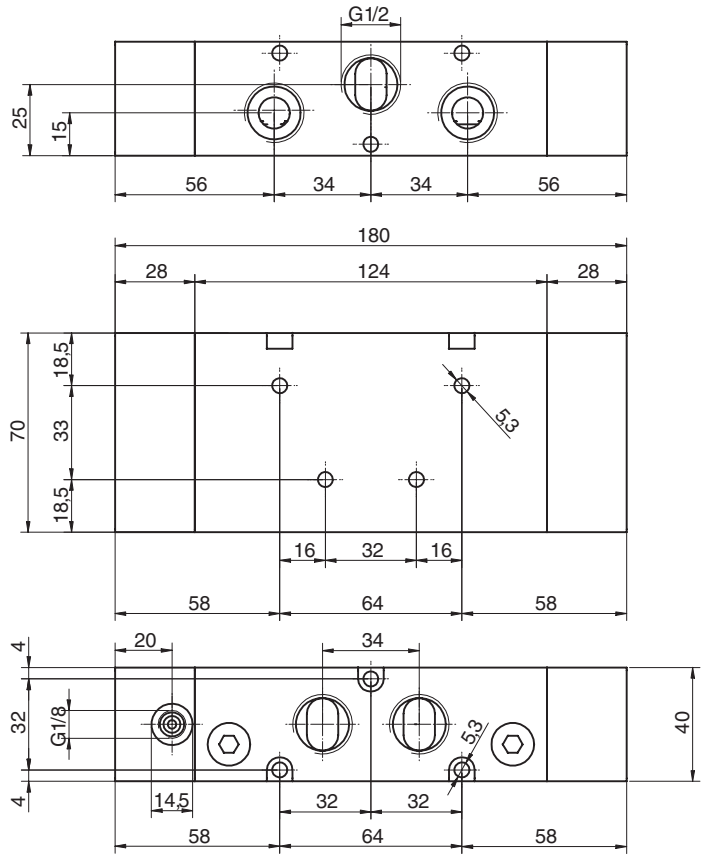

Version	Symbol	Code	Item
5/2 pilot/spring	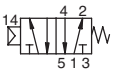	034117	A1P450

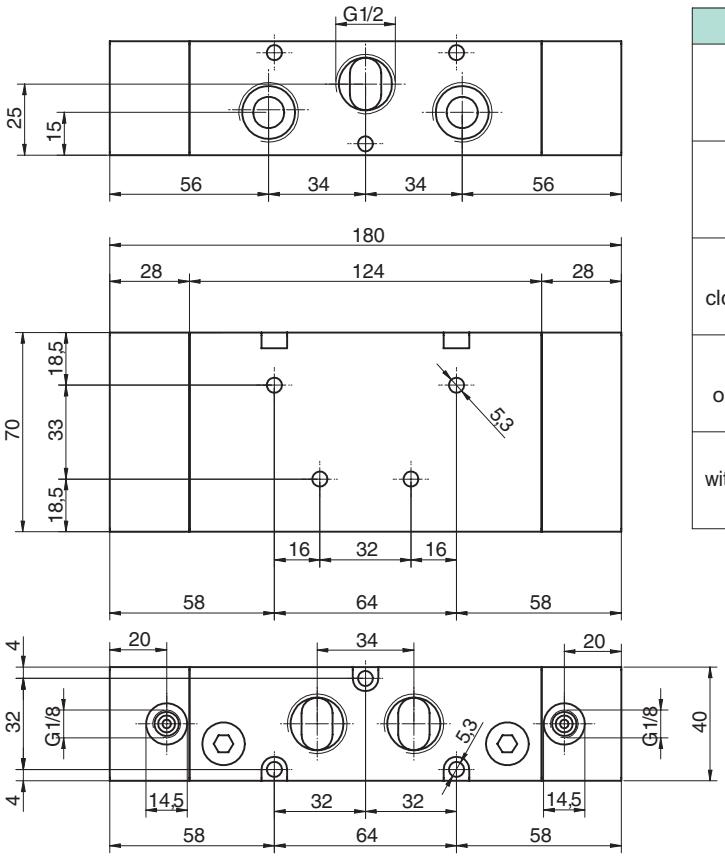

Version	Symbol	Code	Item
5/2 pilot/pilot		034118	A1P451
5/2 pilot/pilot differential	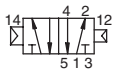	034136	A1P452
5/3 closed centres	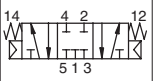	034129	A1P470
5/3 open centres	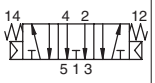	034130	A1P471
5/3 with pressurised centres	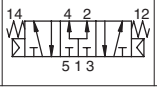	034135	A1P472

Executions

Version	Symbol	Code	Item
5/2 solenoid/spring	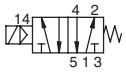	032020	ISO1E50
5/2 solenoid/solenoid	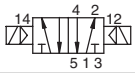	032030	ISO1E51
5/2 solenoid/solenoid differential		032037	ISO1E52
5/3 with closed centres	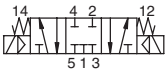	032031	ISO1E70
5/3 with open centres	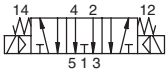	032032	ISO1E71
5/3 with pressurised centres	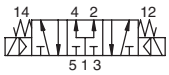	032043	ISO1E72
5/2 solenoid/spring external air pilot	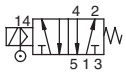	032021	ISO1K50
5/2 solenoid/solenoid external air pilot		032044	ISO1K51
5/2 solenoid/solenoid differential external air pilot	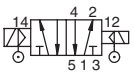	032048	ISO1K52
5/3 with closed centres external air pilot	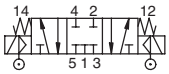	032049	ISO1K70
5/3 with open centres external air pilot	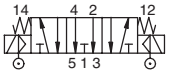	032053	ISO1K71
5/3 with pressurised centres external air pilot	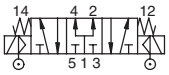	032054	ISO1K72

NOTE: FOR VALVES WITH PILOT IN LINE SEE PAGE 2.111.1

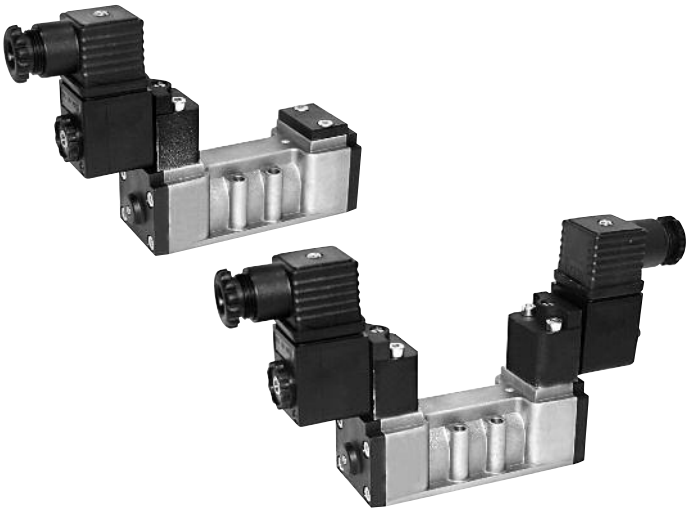

Series of spool valves, conforming to ISO 5599/1 standards for the mounting only on sub-base, with CNOMO pilot.
Coils and connectors are to be ordered separately.
For the coils type ASA12.../ASA2... see page 2.200.1
For the connectors type A122... /A182... see page 2.210.20
For the sub-bases type SBA1... see page 2.120.1

Code key

Series	Size	Actuation	Function
ISO	1 2	E = electrical K = elettrical with external air pilot	50 = 5/2 solenoid/spring 51 = 5/2 solenoid/solenoid 52 = 5/2 solenoid/solenoid differential 70 = 5/3 CC 71 = 5/3 CO 72 = 5/3 CP

On request, they can be supplied according Directive 94/9/EC - **ATEX**
CE Ex **II 2 GDc T5**

Technical data

Fluid	Compressed filtered air with or without lubrication. Lubrication, if be used, must be continous.		
Pressure range	0 ÷ 10 bar		
Temperature range	-10°C ÷ +60°C		
Orifice	8,5 mm		
Flow	1100 Nl/min at 6 bar with ΔP 1 bar		
Minimum piloting pressure	Monostable: 2 bar	Bistable: 1 bar	3 positions: 2 bar
Mounting	In any position		
Electropilot	Conforming to CNOMO		
Manual override	Bistable on solenoid pilot - Monostable on valve body		
Materials	Body: Aluminium Heads: Plastic Spool: Aluminium Distancers: Plastic Seals: NBR		

ISO 1, 5/2 - 5/3, electrically operated, with CNOMO pilot

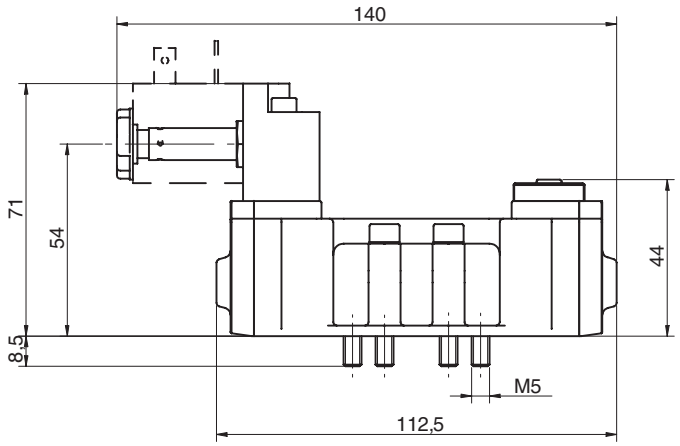

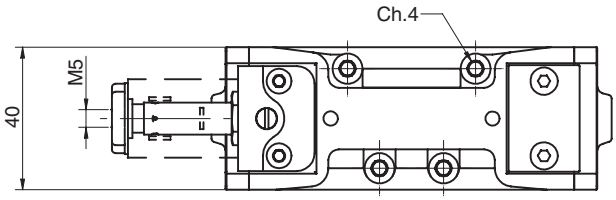

Version	Symbol	Code	Item
5/2 solenoid/spring	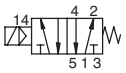	032020	ISO1E50
5/2 solenoid/spring external air pilot	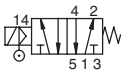	032021	ISO1K50

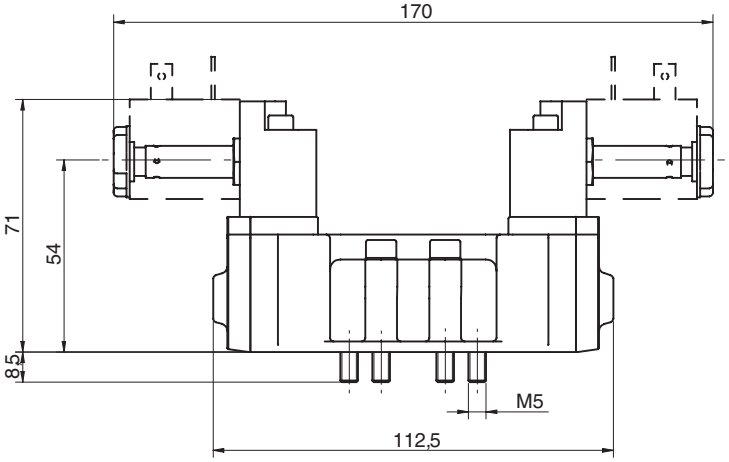

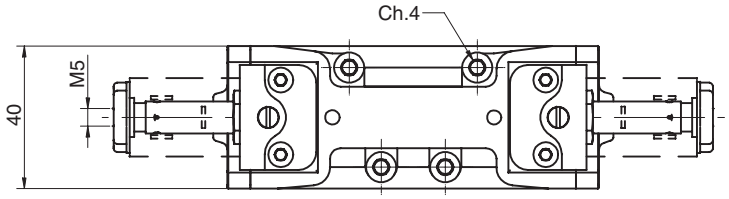

Version	Symbol	Code	Item
5/2 solenoid/solenoid	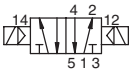	032030	ISO1E51
5/2 solenoid/solenoid differential	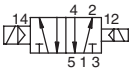	032037	ISO1E52
5/3 with closed centres	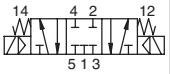	032031	ISO1E70
5/3 with open centres	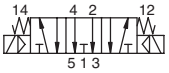	032032	ISO1E71
5/3 with pressurised centres	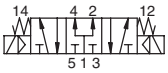	032043	ISO1E72
5/2 solenoid/solenoid external air pilot	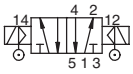	032044	ISO1K51
5/2 solenoid/ solenoid external air pilot differential	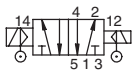	032048	ISO1K52
5/3 with closed centres external air pilot	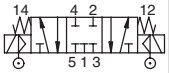	032049	ISO1K70
5/3 with open centres external air pilot	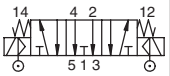	032053	ISO1K71
5/3 with pressurised centres external air pilot	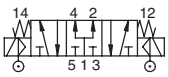	032054	ISO1K72

Execution

Version	Symbol	Code	Item
5/2 solenoid/spring	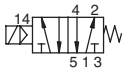	032060	ISO1EL50
5/2 solenoid/solenoid		032070	ISO1EL51
5/2 solenoid/solenoid differential	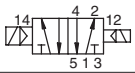	032061	ISO1EL52
5/3 with closed centres	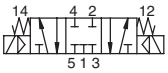	032071	ISO1EL70
5/3 with open centres	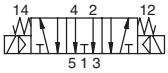	032072	ISO1EL71
5/3 with pressurised centres	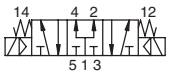	032066	ISO1EL72
5/2 solenoid/spring external air pilot	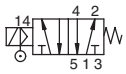	032063	ISO1KL50
5/2 solenoid/solenoid external air pilot		032064	ISO1KL51
5/2 solenoid/solenoid differential external air pilot	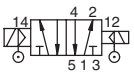	032065	ISO1KL52
5/3 with closed centres external air pilot	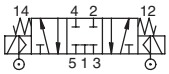	032067	ISO1KL70
5/3 with open centres external air pilot	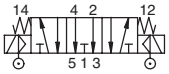	032068	ISO1KL71
5/3 with pressurised centres external air pilot	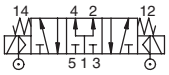	032069	ISO1KL72

Series of spool valves, conforming to ISO 5599/1 standards for the mounting only on sub-base, with IN LINE pilot.
Coils and connectors are to be ordered separately.
For the coils type ASA12.../ASA2... see page 2.200.1
For the connectors type A122... /A182... see page 2.210.20
For the sub-bases type SBA1... see page 2.120.1

Code key

Series	Size	Actuation	Function
ISO	1 2	EL = electrical KL = elettrical with external air pilot	50 = 5/2 solenoid/spring 51 = 5/2 solenoid/solenoid 52 = 5/2 solenoid/solenoid differential 70 = 5/3 CC 71 = 5/3 CO 72 = 5/3 CP

NOTE: FOR VALVES WITH CNOMO PILOT SEE PAGE 2.110.1

On request, they can be supplied according Directive 94/9/EC - **ATEX**
CE Ex **II 2 GDc T5**

Technical data

Fluid	Compressed filtered air with or without lubrication. Lubrication, if be used, must be continous.		
Pressure range	0 ÷ 10 bar		
Temperature range	-10°C ÷ +60°C		
Orifice	8,5 mm		
Flow	1100 Nl/min at 6 bar with ΔP 1 bar		
Minimum piloting pressure	Monostable: 2 bar	Bistable: 1 bar	3 positions: 2 bar
Mounting	In any position		
Electropilot	IN LINE		
Manual override	Bistable on solenoid pilot - Monostable on valve body		
Materials	Body: Aluminium Heads: Plastic Spool: Aluminium Distancers: Plastic Seals: NBR		

ISO 1, 5/2 - 5/3, electrically operated, with IN LINE pilot

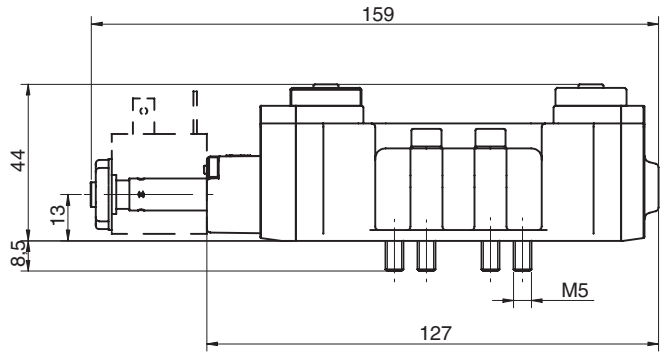

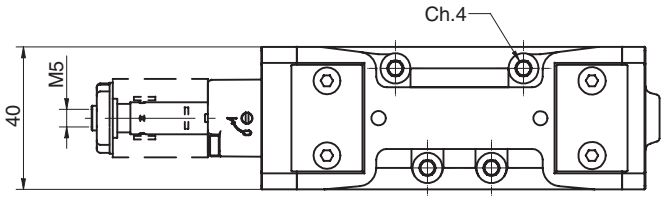

Version	Symbol	Code	Item
5/2 solenoid/spring	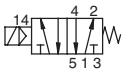	032060	ISO1EL50
5/2 solenoid/spring external air pilot	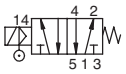	032063	ISO1KL50

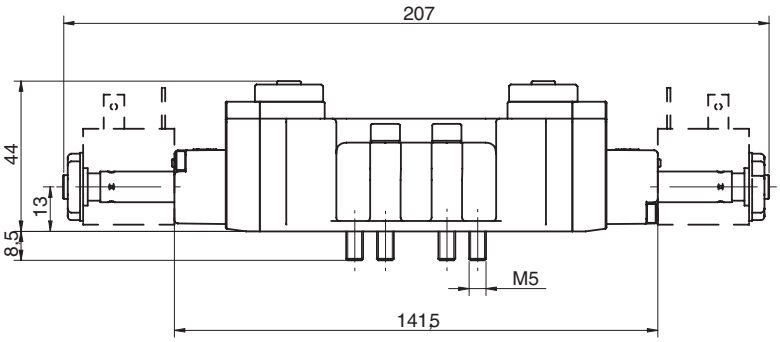

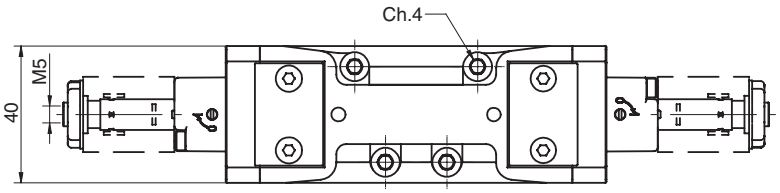

Version	Symbol	Code	Item
5/2 solenoid/solenoid	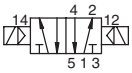	032070	ISO1EL51
5/2 solenoid/solenoid differential	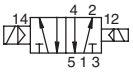	032061	ISO1EL52
5/3 with closed centres	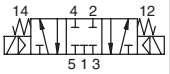	032071	ISO1EL70
5/3 with open centres	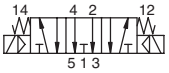	032072	ISO1EL71
5/3 with pressurised centres	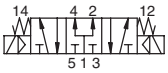	032066	ISO1EL72
5/2 solenoid/solenoid external air pilot	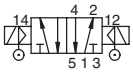	032064	ISO1KL51
5/2 solenoid/ solenoid external air pilot differential	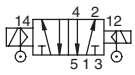	032065	ISO1KL52
5/3 with closed centres external air pilot	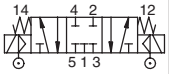	032067	ISO1KL70
5/3 with open centres external air pilot	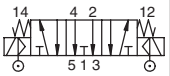	032068	ISO1KL71
5/3 with pressurised centres external air pilot	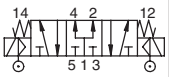	032069	ISO1KL72

Executions

Version	Symbol	Code	Item
5/2 pilot/spring	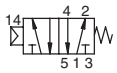	032000	ISO1P50
5/2 pilot/pilot	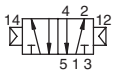	032001	ISO1P51
5/2 pilot/pilot differential	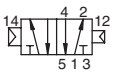	032002	ISO1P52
5/3 with closed centres	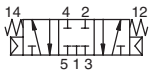	032003	ISO1P70
5/3 with open centres	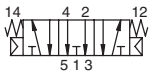	032004	ISO1P71
5/3 with pressurised centres	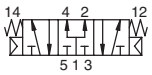	032019	ISO1P72

Series of spool valves, conforming to ISO 5599/1 standards for the mounting only on sub-base.
For the sub-bases type SBA1... see page 2.120.1

On request, they can be supplied according Directive 94/9/EC - **ATEX**
CE Ex II 2 GDc T5

Code key

Series	Actuation	Size	Function
ISO	1 2	P = pneumatic	50 = 5/2 pilot/spring 51 = 5/2 pilot/pilot 52 = 5/2 pilot/pilot differential 70 = 5/3 CC 71 = 5/3 CO 72 = 5/3 CP

Technical data

Fluid	Compressed filtered air with or without lubrication. Lubrication, if be used, must be continous.		
Pressure range	0 ÷ 10 bar		
Temperature range	-10°C ÷ +60°C		
Orifice	8,5 mm		
Flow	1100 Nl/min at 6 bar with ΔP 1 bar		
Minimum piloting pressure	Monostable: 2 bar	Bistable: 1 bar	3 positions: 2 bar
Mounting	In any position		
Manual override	Monostable on valve body		
Materials	Body: Aluminium Heads: Plastic Spool: Aluminium Distancers: Plastic Seals: NBR		

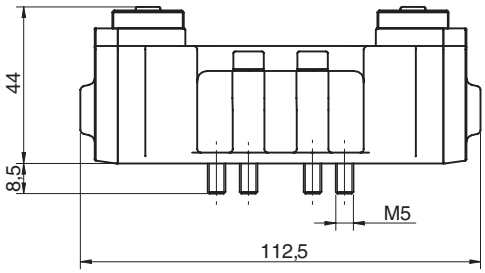

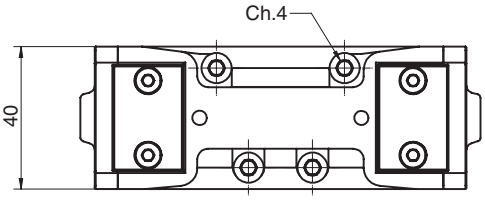

Version	Symbol	Code	Item
5/2 pilot/spring	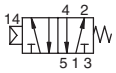	032000	ISO1P50
5/2 pilot/pilot		032001	ISO1P51
5/2 pilot/pilot differential	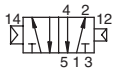	032002	ISO1P52
5/3 with closed centres	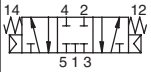	032003	ISO1P70
5/3 with open centres	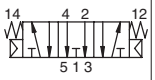	032004	ISO1P71
5/3 with pressurised centres	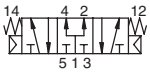	032019	ISO1P72

Executions			
Version	Symbol	Code	Item
Single sub-base		032190	SBA1S
Manifold sub-base		032120	SBA1M
Blank manifold end plate		032140	SBA1C
Ported manifold end plate		032141	SBA1A
Manifold blanking plate		032170	SBA1T
Interface for sub-base from size ISO1 to ISO2		032160	SBA1A2

The blank manifold end plate can be used to separate 2 supplies with different pressures on the same manifold.

On request, they can be supplied according Directive 94/9/EC - **ATEX**
CE Ex **II 2 GDc T5**

Series of single and manifold sub-bases for valves ISO5599/1 size 1.

Materials:	Die-cast aluminium
	Seals: Nitrile rubber (NBR)
	Screws: Zinc plated steel

The kit SBA1M includes: 2 screws and 3 seals
The kit SBA1C/A includes: 2 screws and 3 seals
The kit SBA1T includes: 4 screws and 1 seal
The kit SBA1A2 includes: 4 screws and 6 seals

type: **SBA1S**

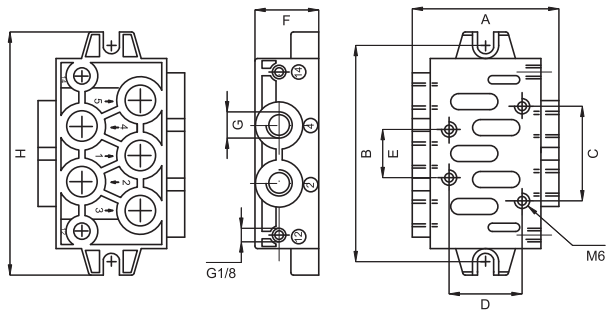

A	B	C	D	E	F	G	H
56	82,5	36	28	18	24	1/4”	92,5

type: **SBA1M**

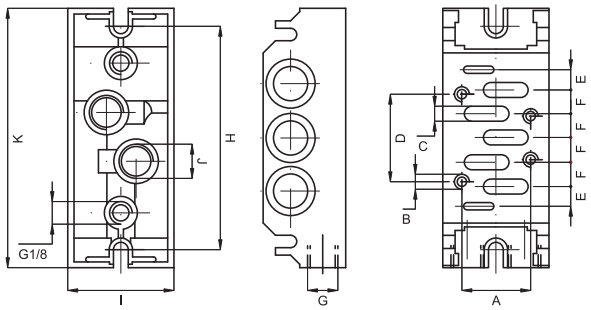

A	B	C	D	E	F	G	H	I	J	K
28	M5	4,5	36	8,5	9	1/4”	92	43	1/4”	106

type: **SBA1A2**

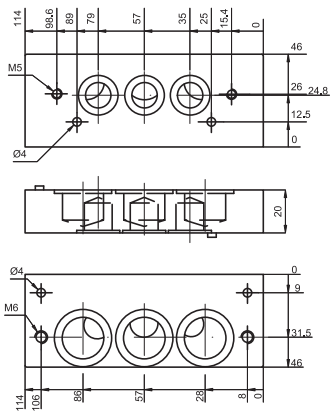

type: **SBA1C**
SBA1A

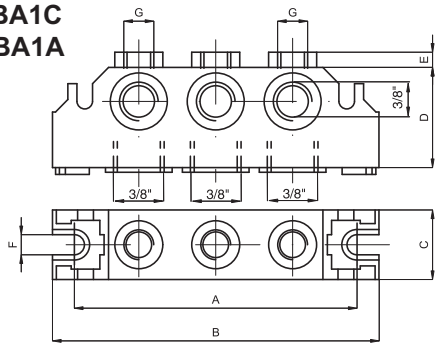

A	B	C	D	E	F	G
92	106	22	36	8	5,5	1/4”

Valves ISO 5599/1

ISO2, 5/2 - 5/3, electrically operated, with CNOMO pilot

Execution			
Version	Symbol	Code	Item
5/2 solenoid/spring	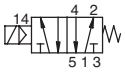	032040	ISO2E50
5/2 solenoid/solenoid		032050	ISO2E51
5/2 solenoid/solenoid differential		032042	ISO2E52
5/3 with closed centres	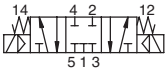	032051	ISO2E70
5/3 with open centres	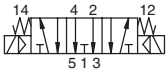	032052	ISO2E71
5/3 with pressurised centres	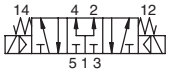	032055	ISO2E72
5/2 solenoid/spring external air pilot	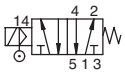	032039	ISO2K50
5/2 solenoid/solenoid external air pilot		032056	ISO2K51
5/2 solenoid/solenoid differential external air pilot		032057	ISO2K52
5/3 with closed centres external air pilot	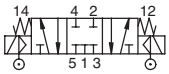	032058	ISO2K70
5/3 with open centres external air pilot	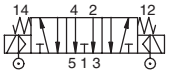	032059	ISO2K71
5/3 with pressurised centres external air pilot	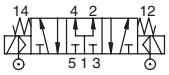	032062	ISO2K72

Series of spool valves, conforming to ISO 5599/1 standards for the mounting only on sub-base, with CNOMO pilot.
Coils and connectors are to be ordered separately.

For the coils type ASA12.../ASA2... see page 2.200.1
For the connectors type A122... /A182... see page 2.210.20
For the sub-bases type SBA2... see page 2.137.1

Series	Size	Actuation	Function
ISO	1 2	E = electrical K = elettrical with external air pilot	50 = 5/2 solenoid/spring 51 = 5/2 solenoid/solenoid 52 = 5/2 solenoid/solenoid differential 70 = 5/3 CC 71 = 5/3 CO 72 = 5/3 CP

On request, they can be supplied according Directive 94/9/EC - **ATEX**
CE Ex **II 2 GDc T5**

Technical data			
Fluid	Compressed filtered air with or without lubrication. Lubrication, if be used, must be continous.		
Pressure range	0 ÷ 10 bar		
Temperature range	-10°C ÷ +60°C		
Orifice	15 mm		
Flow	2900 Nl/min at 6 bar with ΔP 1 bar		
Minimum piloting pressure	Monostable: 2.5 bar	Bistable: 1 bar	3 positions: 2.5 bar
Mounting	In any position		
Electropilot	Conforming to CNOMO		
Manual override	Bistable on solenoid pilot - Monostable on valve body		
Materials	Body: Aluminium Heads: Plastic Spool: Aluminium Distancers: Aluminium Seals: NBR		

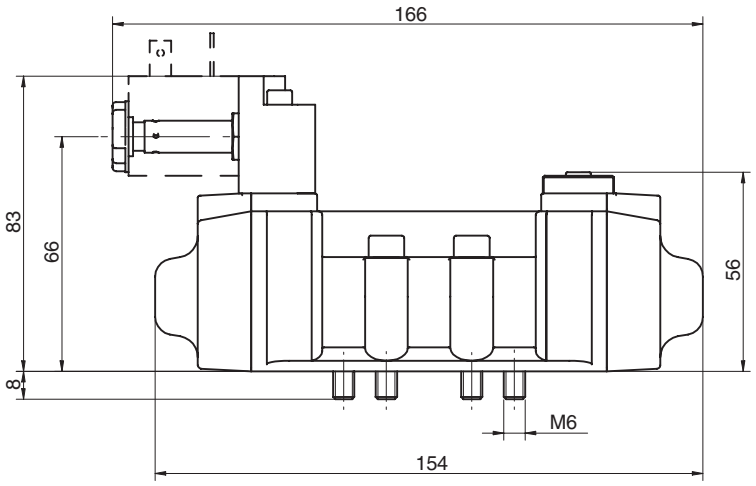

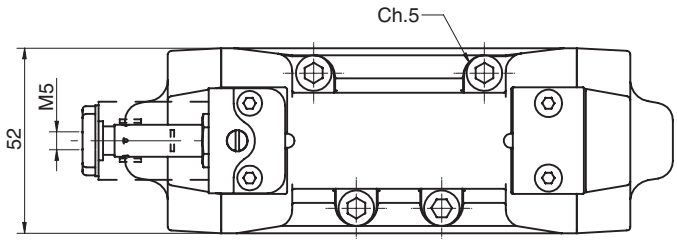

Version	Symbol	Code	Item
5/2 solenoid/spring	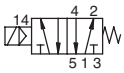	032040	ISO2E50
5/2 solenoid/spring external air pilot	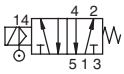	032039	ISO2K50

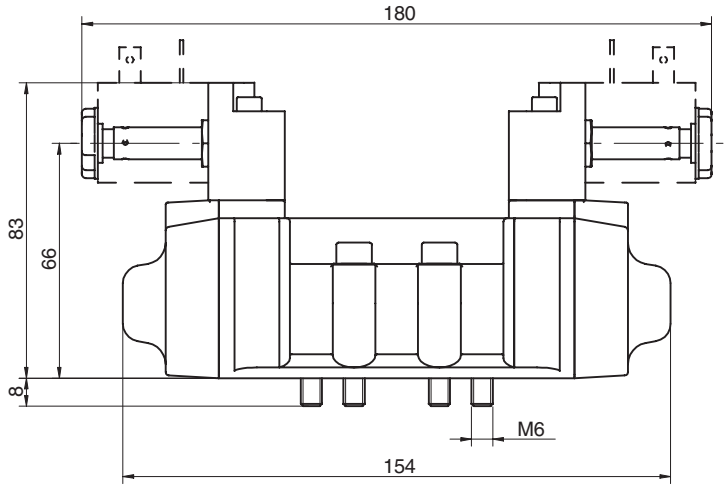

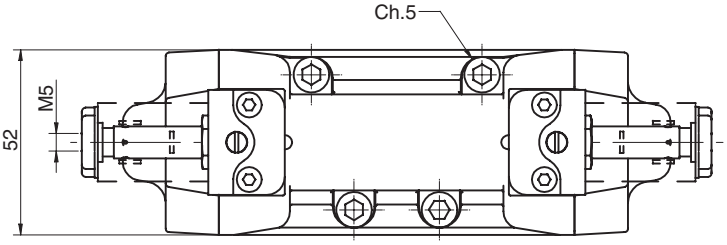

Version	Symbol	Code	Item
5/2 solenoid/solenoid	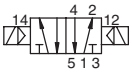	032050	ISO2E51
5/2 solenoid/solenoid differential	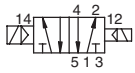	032042	ISO2E52
5/3 with closed centres	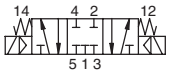	032051	ISO2E70
5/3 with open centres	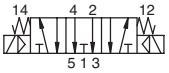	032052	ISO2E71
5/3 with pressurised centres	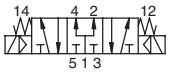	032055	ISO2E72
5/2 solenoid/solenoid external air pilot	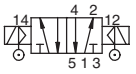	032056	ISO2K51
5/2 solenoid/sole-noid differential external air pilot	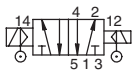	032057	ISO2K52
5/3 with closed centres external air pilot	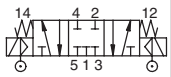	032058	ISO2K70
5/3 with open centres external air pilot	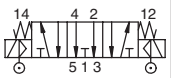	032059	ISO2K71
5/3 with pressurised centres external air pilot	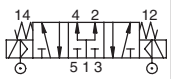	032062	ISO2K72

Executions

Version	Symbol	Code	Item
5/2 pilot/spring	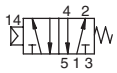	032005	ISO2P50
5/2 pilot/pilot	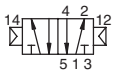	032011	ISO2P51
5/2 pilot/pilot differential	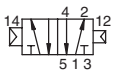	032012	ISO2P52
5/3 with closed centres	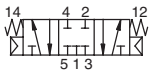	032013	ISO2P70
5/3 with open centres	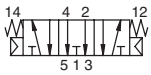	032014	ISO2P71
5/3 with pressurised centres	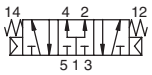	032038	ISO2P72

On request, they can be supplied according Directive 94/9/EC - **ATEX**
CE Ex II 2 GDc T5

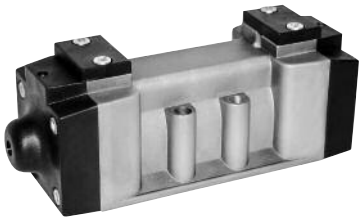

Series of spool valves, conforming to ISO 5599/1 standards for the mounting only on sub-base.
For the sub-bases type SBA2... see page 2.137.1

Code key

Series	Size	Actuation	Function
ISO	1 2	P = pneumatic	50 = 5/2 pilot/spring 51 = 5/2 pilot/pilot 52 = 5/2 pilot/pilot differential 70 = 5/3 CC 71 = 5/3 CO 72 = 5/3 CP

Technical data

Fluid	Compressed filtered air with or without lubrication. Lubrication, if be used, must be continous.		
Pressure range	0 ÷ 10 bar		
Temperature range	-10°C ÷ +60°C		
Orifice	15 mm		
Flow	2900 Nl/min at 6 bar with ΔP 1 bar		
Minimum piloting pressure	Monostable: 2.5 bar	Bistable: 1 bar	3 positions: 2.5 bar
Mounting	In any position		
Manual override	Monostable on valve body		
Materials	Body: Aluminium Heads: Plastic Spool: Aluminium Distancers: Aluminium Seals: NBR		

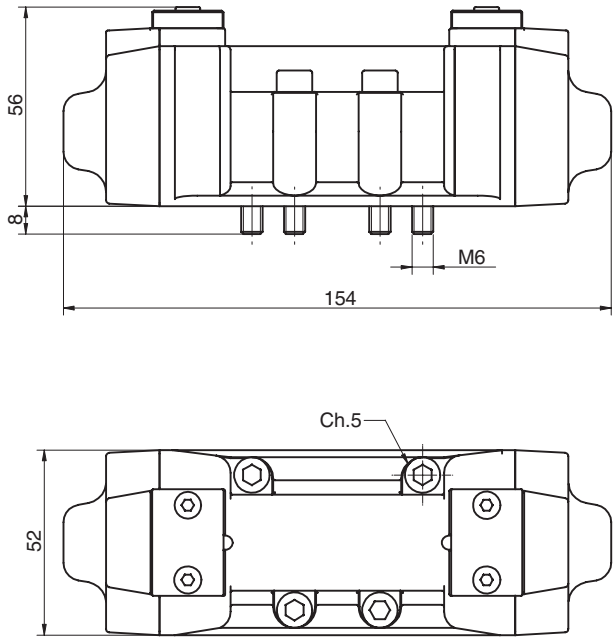

Version	Symbol	Code	Item
5/2 pilot/spring	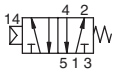	032005	ISO2P50
5/2 pilot/pilot		032011	ISO2P51
5/2 pilot/pilot differential	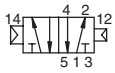	032012	ISO2P52
5/3 with closed centres	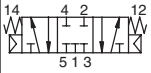	032013	ISO2P70
5/3 with open centres	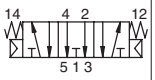	032014	ISO2P71
5/3 with pressurised centres	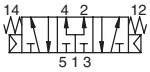	032038	ISO2P72

2

Executions			
Version	Symbol	Code	Item
Single sub-base		032200	SBA2S
Manifold sub-base		032130	SBA2M
Blank manifold end plate		032150	SBA2C
Ported manifold end plate		032151	SBA2A
Manifold blanking plate		032180	SBA2T
Interface for sub-base from size ISO1 to ISO2		032160	SBA1A2

The blank manifold end plate can be used to separate 2 supplies with different pressures on the same manifold.

On request, they can be supplied according Directive 94/9/EC - **ATEX**
CE Ex **II 2 GDc T5**

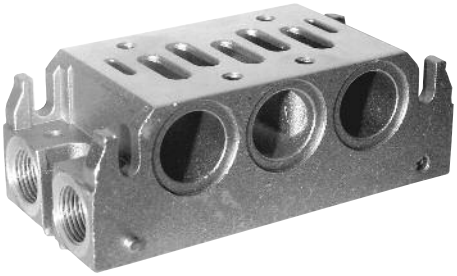

Series of single and manifold sub-bases for valves ISO5599/1 size 2.

Materials:	Die-cast aluminium Seals: Nitrile rubber (NBR) Screws: Zinc plated steel

The kit SBA2M includes: 2 screws and 3 seals
The kit SBA2C/A includes: 2 screws and 3 seals
The kit SBA2T includes: 4 screws and 1 seal
The kit SBA1A2 includes: 4 screws and 6 seals

type: **SBA2S**

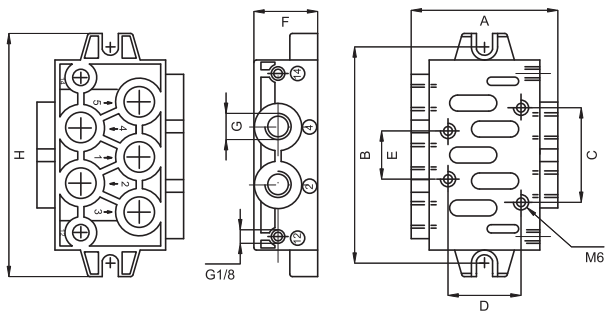

A	B	C	D	E	F	G	H
65	100,5	48	38	24	30	3/8”	112,5

type: **SBA2M**

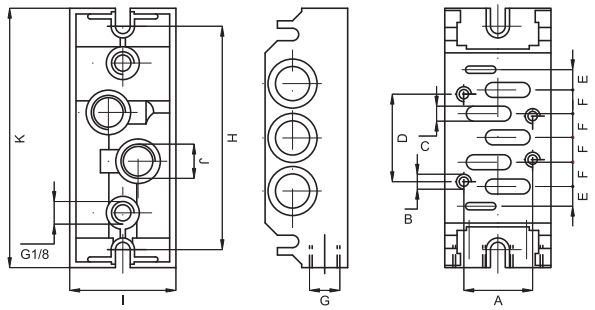

A	B	C	D	E	F	G	H	I	J	K
38	M6	7	48	10	12	3/8”	102	56	3/8”	120

type: **SBA1A2**

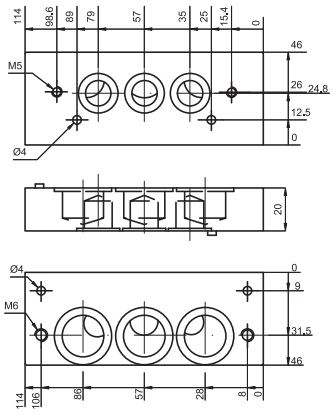

type: **SBA2C**
SBA2A

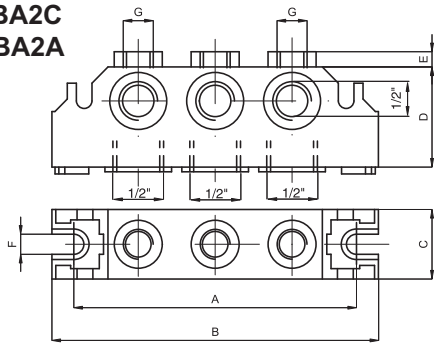

A	B	C	D	E	F	G
102	120	29	43	7	6,5	1/4”

Indirectly operated solenoid valves for water and steam

2/2, normally closed from 1/4” to 2”

Standard executions		
Version	Symbol	Type
With NBR seals (-10 °C ÷ + 90 °C)	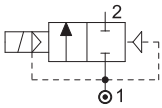	AEN22
With FKM seals (-10 °C ÷ + 130 °C)		AEV22
With EPDM seals EPDM (+ 140 °C)		AEP22

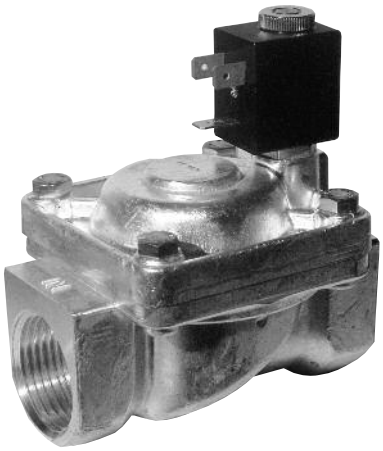

Ports			
1/4”	= 014	1”	= 100
3/8”	= 038	1 1/4”	= 114
1/2”	= 012	1 1/2”	= 112
3/4”	= 034	2”	= 200

Series of indirectly operated valves for fluids and compressed air, servoassisted with diaphragm.
Coils and connectors are to be ordered separately.

For the coils type ASA33/ASA32 see from page 2.200.20.
For the connectors type A122/A182 see page 2.210.20/2.210.30.

How to order: AEN22100

AEN22	100
Type	Port

For order codes see the table below.

Technical data	
Fluid	Compressed filtered air with or without lubrication, water and steam
Pressure range	25 bar
Fluid maximum viscosity	25 cSt (mm^2/s)
Orifice	See the table below
Flow	See the table below
Manual override	Two stable position, flat
Mounting	Better with the coil high
Materials	Body: Brass Seals: NBR - FKM - EPDM Internal parts: Stainless steel

Ports	Orifice mm	Flow m^3/h	Differential pressure bar			Power			Coil type	Order codes		
			Min	Max		AC (VA)		DC (Watt)		NBR	FKM	EPDM
				AC	DC	Inrush	Rating					
1/4”	10	1,5	0,15	15	15	12	8	6,5	ASA33	035501	035511	035521
3/8”	12	2	0,15	15	15	12	8	6,5	ASA33	035502	035512	035522
1/2”	12	2,2	0,15	15	15	12	8	6,5	ASA33	035503	035513	035523
3/4”	18	5,2	0,15	13	13	12	8	6,5	ASA33	035504	035514	035524
1”	24	10,2	0,15	10	10	12	8	6,5	ASA33	035505	035515	035525
1 1/4”	38	18	0,15	10	10	20	15	10	ASA32	035506	035516	035526
1 1/2”	38	21	0,15	10	10	20	15	10	ASA32	035507	035517	035527
2”	50	36	0,15	10	10	20	15	10	ASA32	035508	035518	035528

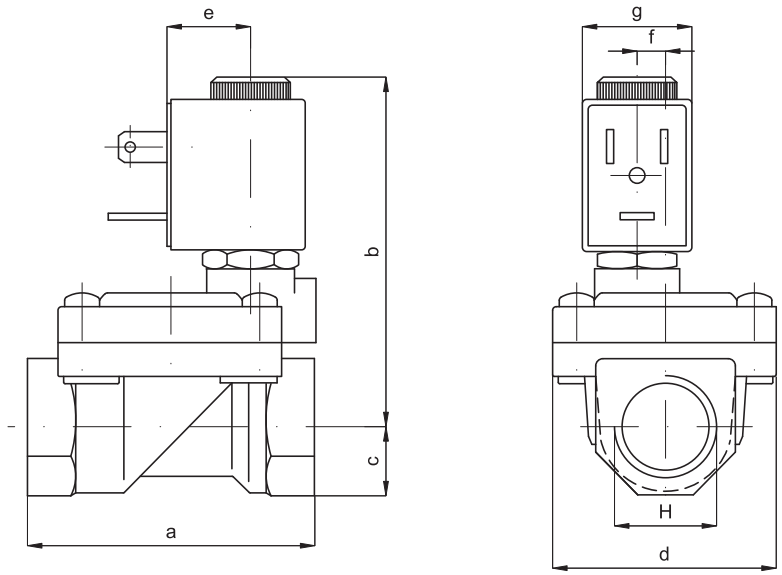

H	a	b	c	d	e	f	g	Weight kg.
1/4”	47	64	11	32	16	-	22	0,25
3/8”	60	73	14	45	16	6	22	0,45
1/2”	60	73	14	45	16	6	22	0,40
3/4”	75	75	18	55	20	8,5	22	0,66
1”	96	85	20	72	32	-	22	1,20
1” 1/4	144	95	28	102	45	-	30	3,20
1” 1/2	144	95	28	102	45	-	30	2,90
2”	152	119	35	119	48	-	30	4,50

Flip-flop 1/4” and continuous cycling 1/8”, 5/2 electric and pneumatic

Executions			
Version	Symbol	Code	Item
Electric flip-flop	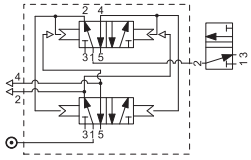	033170	AEF1520
Pneumatic flip-flop		033160	APF1520
Electric continuous cycling	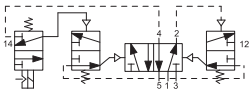	033172	AEC1520
Pneumatic continuous cycling		033171	APC1520

On request, they can be supplied according Directive 94/9/EC - **ATEX**
CE Ex **II 2 GDc T5**

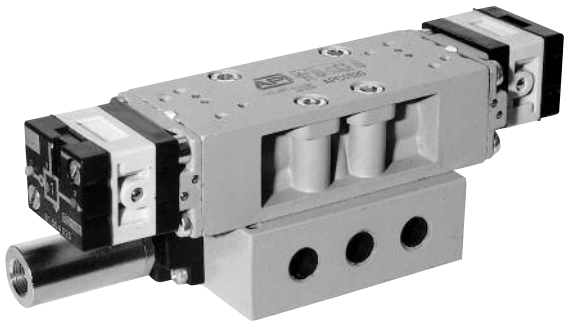

Series of integrated circuits, electrically or pneumatically operated.

Flip-flop: Circuit composed by a 1/4” power valve 5/2 two stable position. With the same signal applied twice at different times the cylinder carries out a complete cycle.

Continuous cycling: Circuit composed by a 1/8’’ power valve 5/2 single stable position. Keeping the signal the cylinder carries out continuous cycling till the signal is not interrupted.

Coils and connectors are to be ordered separately.
For the coils type ASA12.. see page 2.200.1.
For the connectors type A12209.. see page 2.210.20.

Technical data		
Fluid	Compressed filtered air with or without lubrication. Lubrication, if be used, must be continous.	
Pressure range	2,5 ÷ 10 bar	
Temperature range	-10 °C ÷ + 60°C	
Orifice	6 mm	8 mm
Flow	800 Nl/min	1200 Nl/min
Manual override	Two stable position, flat	
Response time	Energising: 20 ms	De-energising: 38 ms
Mounting	In any position	
Materials	Body:	Painted die-cast aluminium
	Base:	Profiled anodised aluminium
	Seals:	Nitrile rubber (NBR)

Type: **APF1520**

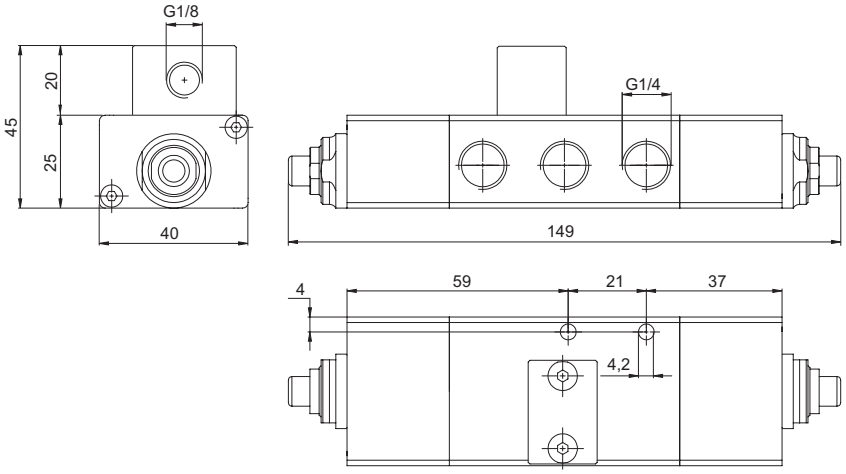

Type: **AEF1520**

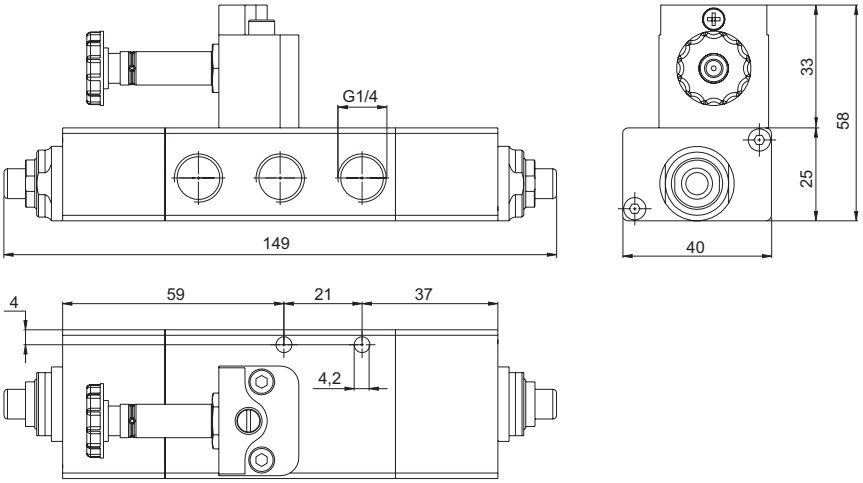

type: **APC1520**

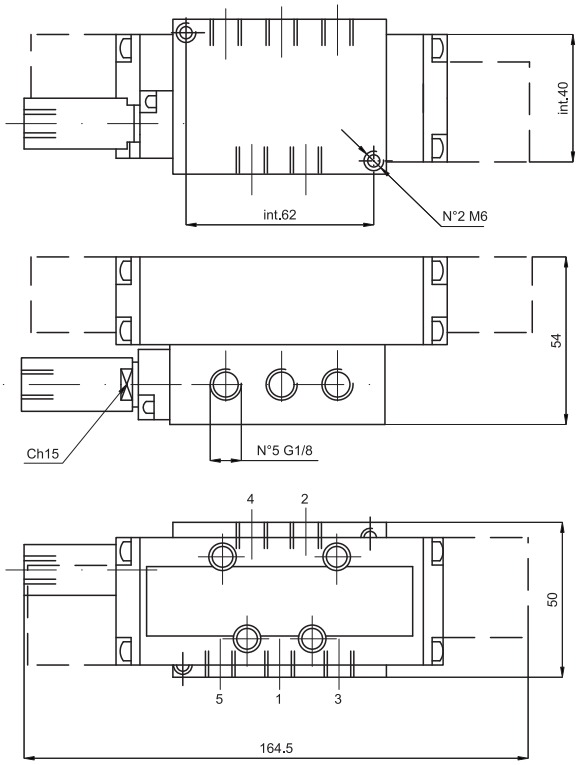

type: **AEC1520**

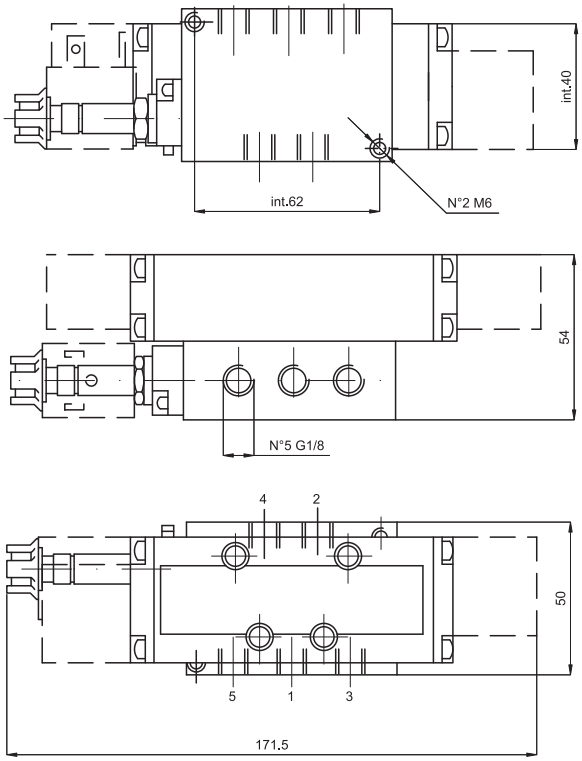

Type **ASA12**

Series of coils with low electrical consumption conforming to EN 60204.1 and VDE 0580 standards, class F.
They can be mounted on the following valves: APA.. , AE14.. , AEF.. , AEC...
For the connectors type A122.. see page 2.210.20.

For **ATEX** coils see page 2.200.50

Voltage		Code	Item
12V	DC	032100	ASA1201200
12V	AC	032101	ASA1201250
24V	DC	032102	ASA1202400
24V	AC	032103	ASA1202450
48V	AC	032104	ASA1204850
110V	AC	032105	ASA1211050
230V	AC	032106	ASA1222050

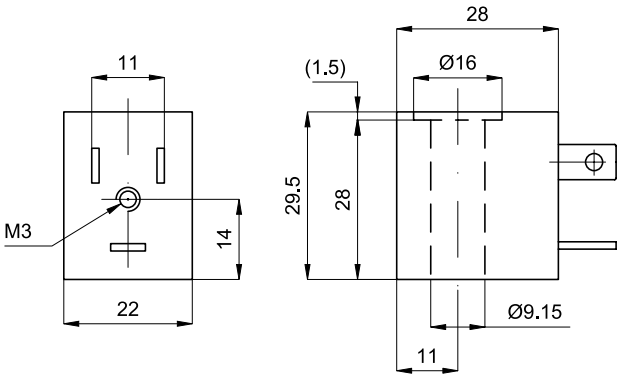

Technical data	Direct current	Alternating current
Voltage tolerance	± 10%	± 10%
Frequency tolerance	-	± 5%
Electrical consumption	3 W	4,2 VA
Voltage	12 e 24 V	12, 24, 48,110, 230 V 50/60HZ
Duty cycle	100% ED	
Class protection	IP 65 (with connector already mounted	
Temperature range	-20 °C ÷ + 50 °C	
Response time	10 ms	

2

Type **ASA18**

Series of coils with low electrical consumption and conforming to EN 60335.1 standards, class F.
They can be mounted on the following valves: AE15.. , AE18...

For the connectors type A052.. see page 2.210.1.

Voltage		Code	Item
12V	DC	034331	ASA1801200
12V	AC	034332	ASA1801250
24V	DC	034333	ASA1802400
24V	AC	034334	ASA1802450
48V	AC	034335	ASA1804850
110V	AC	034336	ASA1811050
230V	AC	034337	ASA1823050

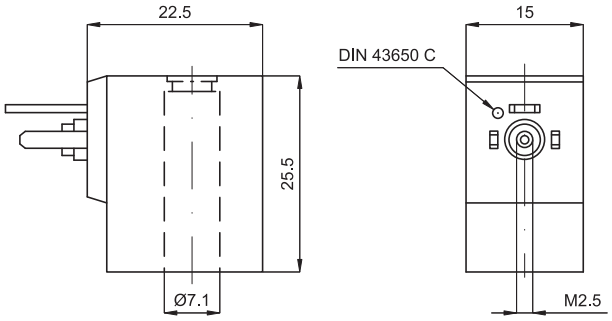

Technical data	Direct current	Alternating current
Voltage tolerance	± 10%	± 10%
Frequency tolerance	-	± 5%
Electrical consumption	1 W	2 / 1,7 VA (50/60HZ)
Voltage	12 e 24 V	12, 24, 48,110, 230 V 50/60HZ
Duty cycle	100% ED	
Class protection	IP 65 (with connector already mounted)	
Temperature range	-20 °C ÷ + 50 °C	
Response time	10 ms	

Type **ASA19**

Series of coils with low electrical consumption and conforming to EN 60204.1 and VDE 0580 standards, class F.
They can be mounted on the following valves: (AE18... out production).
For the connectors type A192.. see page 2.210.10.

Voltage		Code	Item
12V	DC	034281	ASA1901200
12V	AC	034282	ASA1901250
24V	DC	034283	ASA1902400
24V	AC	034284	ASA1902450
48V	AC	034285	ASA1904850
110V	AC	034286	ASA1911050
230V	AC	034287	ASA1922050

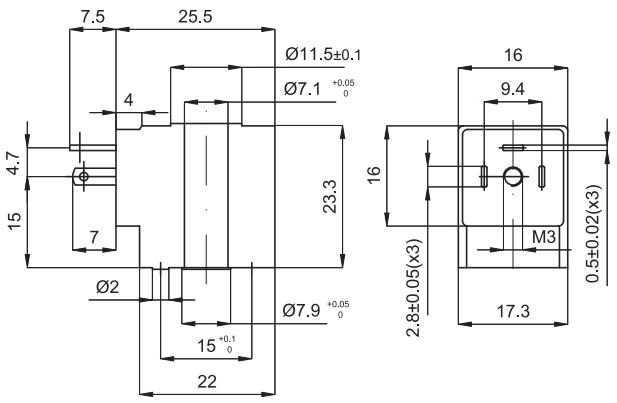

Technical data	Direct current	Alternating current
Voltage tolerance	± 10%	± 10%
Frequency tolerance	-	± 5%
Electrical consumption	1,5 W	3 VA
Voltage	12 e 24 V	12, 24, 48,110, 230 V 50/60HZ
Duty cycle	100% ED	
Class protection	IP 65 (with connector already mounted)	
Temperature range	-20 °C ÷ + 50 °C	
Response time	10 ms	

Type **ASA2**

Series of low consumption coils according EN 60204.1 and VDE 0580 standards, class F.
They can be used on the following valves: AE22.., AEA1.., AEA2...
For connectors type A182.. see page 2.210.30.

For **ATEX** coils see page 2.200.50

Voltage		Code	Item
12V	DC	032109	ASA201200
12V	AC	032110	ASA201250
24V	DC	032111	ASA202400
24V	AC	032112	ASA202450
48V	AC	032113	ASA204850
110V	AC	032114	ASA211050
230V	AC	032115	ASA222050

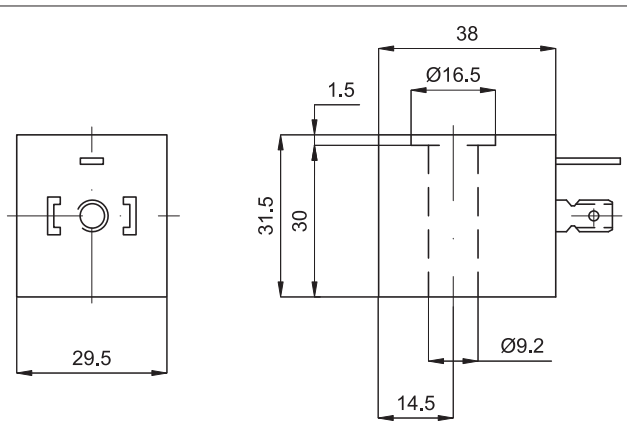

Technical data	Direct current	Alternating current
Voltage tolerance	± 10%	- 10 % ÷ + 15%
Frequency tolerance	-	± 5%
Electrical consumption	2,5 W	2,5 VA
Voltage	12 e 24 V	12, 24, 48,110, 230 V 50/60HZ
Duty cycle	100% ED	
Class protection	IP 65 (with connector already mounted)	
Temperature range	-20 °C ÷ + 50 °C	
Response time	10 ms	

Type **ASA33**

Type ASA33
Series of coils conforming to DIN 43650 standards.
They can be mounted on the following valves: AE..22, from 1/4” to 1’’.
For the connectors type A122.. see page 2.210.20.

Voltage		Code	Item
12V	DC	034311	ASA3301200
12V	AC	034312	ASA3301250
24V	DC	034313	ASA3302400
24V	AC	034314	ASA3302450
48V	AC	034315	ASA3304850
110V	AC	034316	ASA3311050
230V	AC	034317	ASA3323050

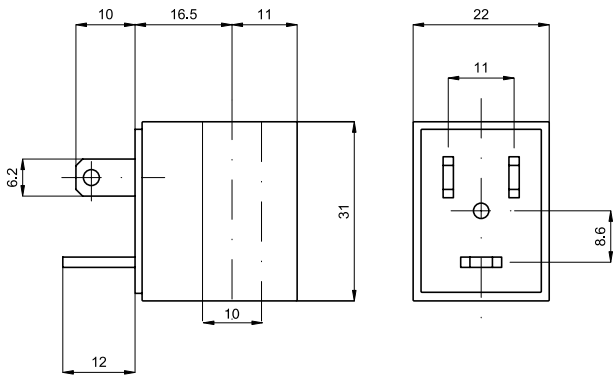

Technical data	Direct current	Alternating current
Voltage tolerance	± 10%	- 10% ÷ +15%
Frequency tolerance	-	± 5%
Electrical consumption	6,5 W	8 VA
Voltage	12 e 24 V	12, 24, 48,110, 230 V 50/60HZ
Duty cycle	100% ED	
Class protection	IP 65 (with connector already mounted)	
Temperature range	-20 °C ÷ + 50 °C	
Response time	10 ms	

Type **ASA32**

Series of coils conforming to DIN 43650/A standards.
They can be mounted on the following valves: AE..22, 1 1/4”, 1 1/2”, 2”.

For the connectors type A182.. see page 2.210.30.

Voltage		Code	Item
12V	DC	034321	ASA3201200
12V	AC	034322	ASA3201250
24V	DC	034323	ASA3202400
24V	AC	034324	ASA3202450
48V	AC	034325	ASA3204850
110V	AC	034326	ASA3211050
230V	AC	034327	ASA3223050

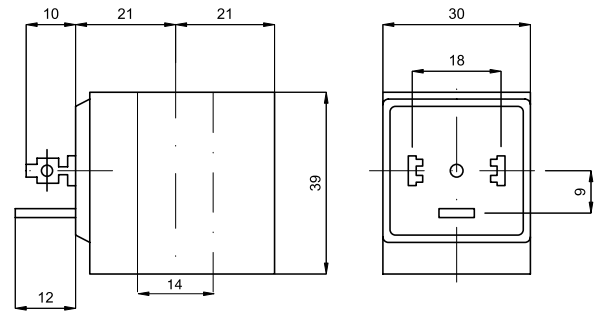

Technical data	Direct current	Alternating current
Voltage tolerance	± 10%	- 10% ÷ +15%
Frequency tolerance	-	± 5%
Electrical consumption	10 W	15 VA
Voltage	12 e 24 V	12, 24, 48,110, 230 V 50/60HZ
Duty cycle	100% ED	
Class protection	IP 65 (with connector already mounted)	
Temperature range	-20 °C ÷ + 50 °C	
Response time	10 ms	

Type **ASA12 / ATEX II3D**

Series of coils conforming to 94/9/EC Directive with ATEX II3D certification, for valves series A1.
Connector type 032118X (A12209N/ATEX)

Directive 94/9/CE - **ATEX**

CE Ex **II3D**

Voltage		Code	Item
12V	DC	032100X	ASA1201200/ATEXII3D
12V	AC	032101X	ASA1201250/ATEXII3D
24V	DC	032102X	ASA1202400/ATEXII3D
24V	AC	032103X	ASA1202450/ATEXII3D
48V	AC	032104X	ASA1204850/ATEXII3D
110V	AC	032105X	ASA1211050/ATEXII3D
230V	AC	032106X	ASA1222050/ATEXII3D

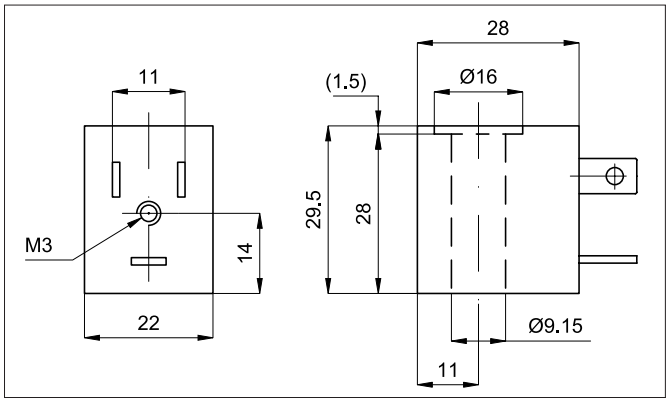

Technical data	Direct current	Alternating current
Voltage tolerance	± 10%	± 10%
Frequency tolerance	-	± 5%
Electrical consumption	3 W	4,2 VA
Voltage	12 e 24 V	12, 24, 48,110, 230 V 50/60HZ
Duty cycle	100% ED	
Class protection	IP 65 (with connector already mounted)	
Temperature range	-20 °C ÷ + 50 °C	
Response time	10 ms	

Type **ASA2/ATEX EExm II2GD**

Series of coils size 30 mm conforming to 94/9/EC Directive for application in potential explosive atmospheres (Group II).
Supplied with 3 mt length cable, these won't need a connector mounted.
With certificate ATEX II2GD ExmbIIT5
For valves series A1 / ISO

Directive 94/9/CE - **ATEX**

CE Ex **II2GD ExmbIIT5**

Voltage		Code	Item
24V	DC	032192	ASA202400/ATEXEEXMII2GD
24V	AC	032193	ASA202450/ATEXEEXMII2GD
48V	AC	032196	ASA204850/ATEXEEXMII2GD
110V	DC	032197	ASA211000/ATEXEEXMII2GD
110V	AC	032194	ASA211050/ATEXEEXMII2GD
230V	AC	032195	ASA222050/ATEXEEXMII2GD

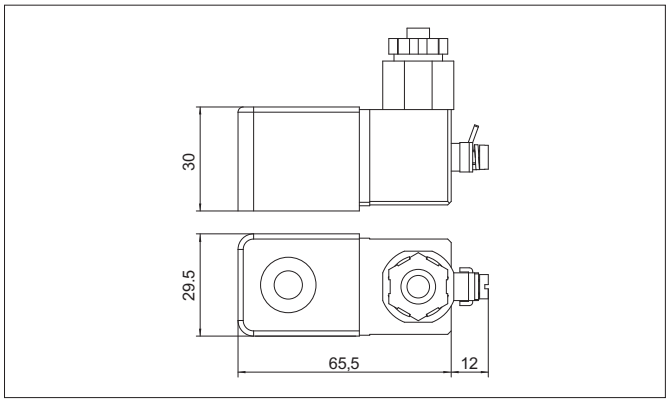

Technical data	Direct current	Alternating current
Voltage tolerance	± 10%	± 10%
Frequency tolerance	3 W	3.2 VA
Frequenzy	-	50/60 Hz
Voltage	24,110	24,48,110,220
Duty cycle	100% ED	
Temperature range	-15 °C ÷ + 50 °C	

Standard executions		
Version	Code	Item
Standard, black	033501	A05207N
Standard, black, cabled	033502	A05207NK
With LED+VDR, transparent, 24 V, AC-DC	033503	A05207T1
With LED+VDR, transparent, 115 V, AC-DC	033504	A05207T2
With LED+VDR, transparent, 230 V, AC-D C	033505	A05207T3
With LED+VDR, black cabled, 24 V, AC-DC	033506	A05207N1K
With LED+VDR, black cabled, 115 V, AC-DC	033507	A05207N2K
With LED+VDR, black cabled 230 V, AC-DC	033508	A05207N3K

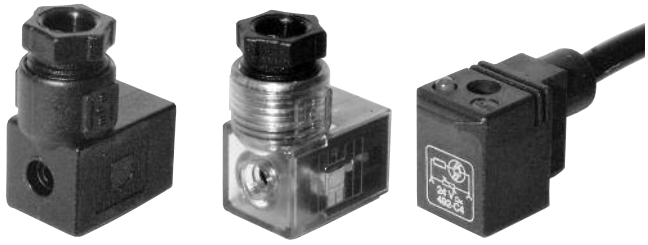

Series of connectors conforming to DIN 43650/C for electropilots type AE05 and coils ASA18.
In the standard version they are provided with fixing screws and NBR profiled seal.
In the provided versions the colour of the LED is yellow.

type: **A05207N**
A05207T

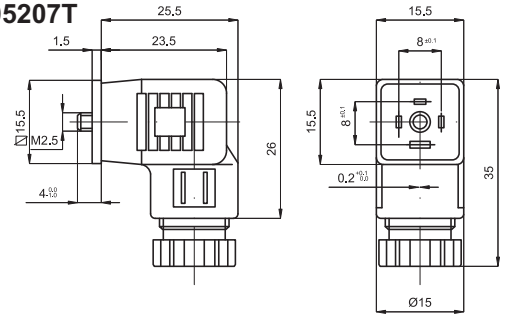

type: **A05207NK**

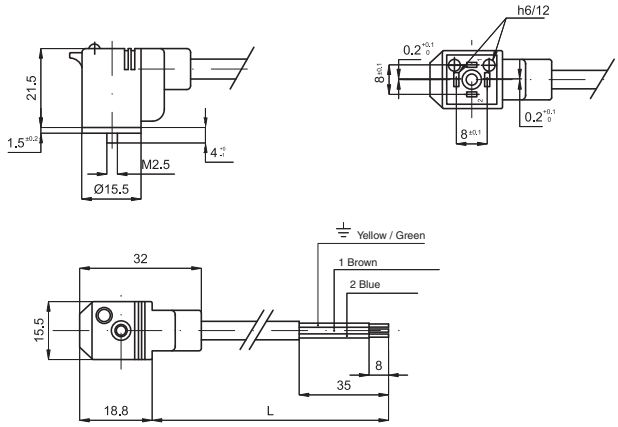

Data of the standard cable	
Lenght	2 m
Material	Self-extinguishing polypropylene
Colour	Grey
Wires colour	Conforming to ENEL 0722 standards
External diameter	5,5 mm
Insulation	300 V
Temperature range	- 5 °C ÷ + 70 °C
Standard	CEI 2022 II OR
Wire section	3x0,5 mm²

Technical data	Standard	Transparent with circuit	Moulding
Contact distance	8 mm	8 mm	8 mm
Nominal voltage	AC max 250 V; DC max 300 V	250 V	250 V
Nominal current	6 A	6 A	-
Maximum current on contacts	10 A	10 A	-
Maximum current	-	-	3 A
Contact resistance	≤ 4 m Ohm	≤ 4 m Ohm	≤ 4 m Ohm
Maximum conductor section	0,75 mm²	0,75 mm²	-
Gland size option	Pg 07	Pg 07	-
Protection class	IP 65 EN 60529	IP 65 EN 60529	IP 65 EN 60529
Insulation class	VDE 0110 - 1/89	VDE 0110 - 1/89	VDE 0110 - 1/89
Temperature range	- 40°C ÷ + 90 °C	- 40°C ÷ + 90 °C	- 40°C ÷ + 90 °C
Earth contact (number)	1	1	2, connected (6/12 pos.)
Poles	2	2	2

Standard executions		
Version	Code	Item
Standard, black	032117	A19207N
Standard, black, cabled	033511	A19207NK
With LED+VDR, transparent, 24 V, AC-DC	032201	A19207T1
With LED+VDR, transparent, 115 V, AC-DC	032202	A19207T2
With LED+VDR, transparent, 230 V, AC-DC	032203	A19207T3
With LED+VDR, black cabled, 24 V, AC-DC	033512	A19207N1K
With LED+VDR, black cabled, 115 V, AC-DC	033513	A19207N2K
With LED+VDR, black cabled, 230 V, AC-DC	033514	A19207N3K

Series of connectors for coils ASA19.
In the standard version they are provided with fixing screw and NBR profiled seal.
In the provided versions the colour of the LED is yellow.

type: **A19207N**
A19207T

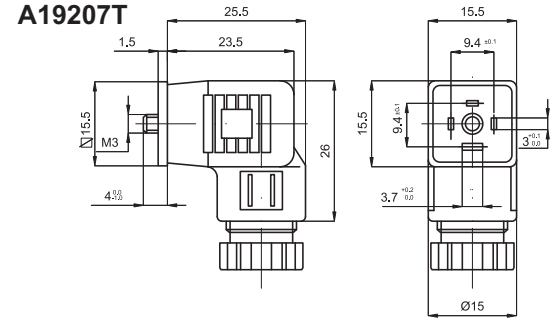

type: **A19207NK**

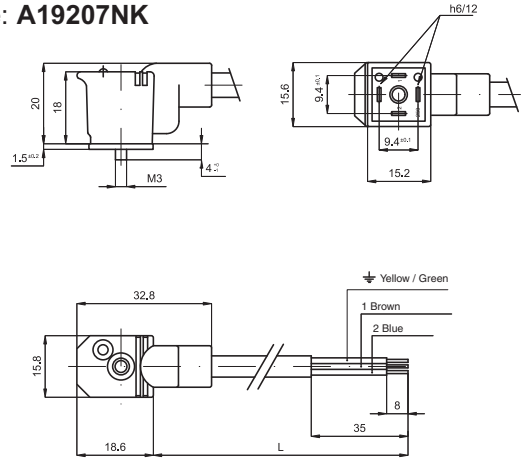

Data of the standard cable	
Length	2 m
Material	Self-extinguishing polypropylene
Colour	Grey
Wires colour	Conforming to ENEL 0722 standards
External diameter	5,5 mm
Insulation	300 V
Temperature range	- 5 °C ÷ + 70 °C
Standard	CEI 2022 II OR
Wire section	3x0,5 mm²

Technical data	Standard	Transparent with circuit	Moulding
Contact distance	9,4 mm	9,4 mm	9,4 mm
Nominal voltage	AC max 250 V; DC max 300 V	250 V	250 V
Nominal current	6 A	6 A	-
Maximum current on contacts	10 A	10 A	-
Maximum current	-	-	3 A
Contact resistance	≤ 4 m Ohm	≤ 4 m Ohm	≤ 4 m Ohm
Maximum conductor section	0,75 mm²	0,75 mm²	-
Gland size option	Pg 07	Pg 07	-
Protection class	IP 65 EN 60529	IP 65 EN 60529	IP 65 EN 60529
Insulation class	VDE 0110 - 1/89	VDE 0110 - 1/89	VDE 0110 - 1/89
Temperature range	- 40°C ÷ + 90 °C	- 40°C ÷ + 90 °C	- 40°C ÷ + 90 °C
Earth contact (number)	1	1	2, connected (6/12 pos.)
Poles	2	2	2

Standard executions		
Version	Code	Item
Standard, black	032118	A12209N
Standard, black, cabled	033521	A12209NK
With LED+VDR, transparent, 24 V, AC-DC	032204	A12209T1
With LED+VDR, transparent,115 V, AC-DC	032205	A12209T2
With LED+VDR, transparent, 230 V, AC-DC	032206	A12209T3
With LED+VDR, black, 2 mt. cabled, 24 V, AC-DC	033522	A12209N1K
With LED+VDR, black, 2 mt. cabled, 115 V, AC-DC	033523	A12209N2K
With LED+VDR, black, 2 mt. cabled, 230 V, AC-DC	033524	A12209N3K

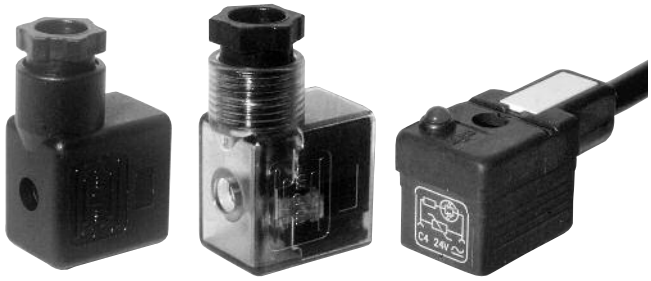

Series of connectors conforming to DIN 43650 standards for coils type ASA12.
In the standard version they are provided with fixing screw and NBR profiled seal.
Yellow LED as standard.

type: **A12209N**
A12209T

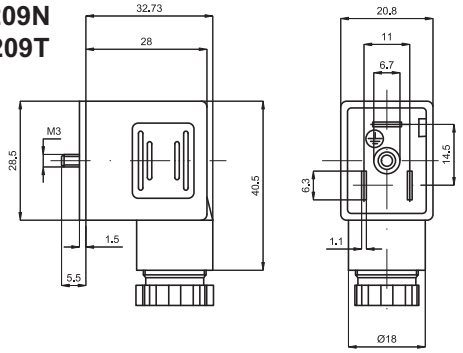

type: **A12209NK**

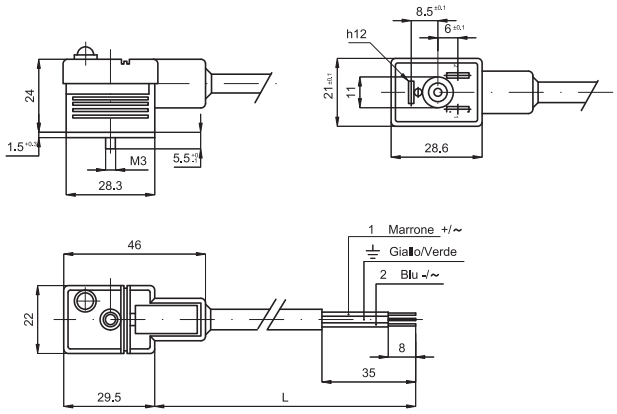

Data of the standard cable	
Length	2 m
Material	Self-extinguishing polypropylene
Colour	Grey
Wires colour	Conforming to ENEL 0722 standards
External diameter	7,3 mm.
Insulation	300 V
Temperature range	- 5 °C ÷ + 70 °C
Standard	CEI 2022 II OR
Wire section	3x1 mm²

Technical data	Standard	Transparent with circuit	Moulding
Contact distance	11 mm	11 mm	11 mm
Nominal voltage	AC max 250 V; DC max 300 V	250 V	250 V
Nominal current	10 A	10 A	-
Maximum current on contacts	16 A	16 A	-
Maximum current	-	-	5 A
Contact resistance	≤ 4 m Ohm	≤ 4 m Ohm	≤ 4 m Ohm
Maximum conductor section	1,5 mm²	1,5 mm²	-
Gland size option	Pg 09	Pg 09	-
Protection class	IP 65 EN 60529	IP 65 EN 60529	IP 65 EN 60529
Insulation class	VDE 0110 - 1/89	VDE 0110 - 1/89	VDE 0110 - 1/89
Temperature range	- 40°C ÷ + 90 °C	- 40°C ÷ + 90 °C	- 40°C ÷ + 90 °C
Earth contact (number)	1	1	2, connected (6/12 pos.)
Poles	2	2	2

Standard executions		
Version	Code	Item
Standard, black	032119	A18209N
Standard, black, cabled	033531	A18209NK
With LED+VDR, transparent, 24 V, AC-DC	032207	A18209T1
With LED+VDR, transparent, 115 V, AC-DC	032208	A18209T2
With LED+VDR, transparent, 230 V, AC-DC	032209	A18209T3
With LED+VDR, black, 2 mt. cabled, 24 V, AC-DC	033532	A18209N1K
With LED+VDR, black, 2 mt. cabled, 115 V, AC-DC	033533	A18209N2K
With LED+VDR, black, 2 mt. cabled, 230 V, AC-DC	033534	A18209N3K

Series of connectors conforming to DIN 43650 - A/ISO 4400 standards for coils type ASA12.
In the standard version they are provided with fixing screw and NBR profiled seal.
In the provided versions the colour of the LED is yellow.

type: **A18209N**
A18209T

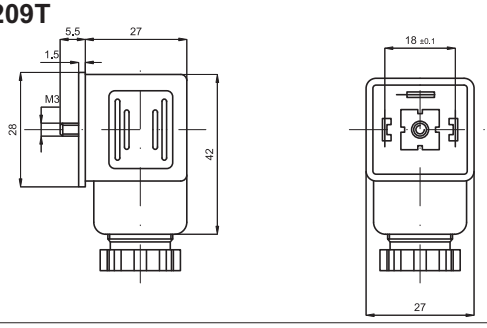

type: **A18209NK**

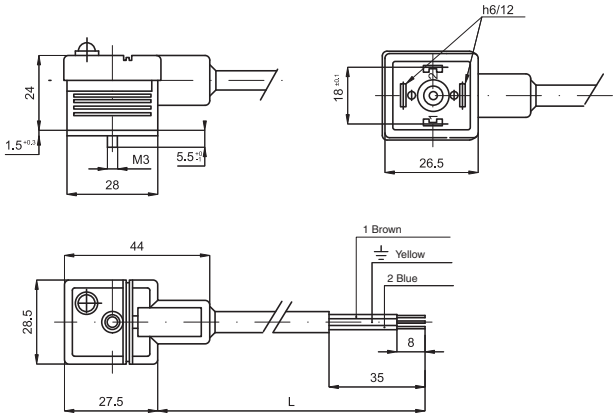

Data of the standard cable	
Length	2 m
Material	Self-extinguishing polypropylene
Colour	Grey
Wires colour	Conforming to ENEL 0722 standards
External diameter	7,3 mm
Insulation	300 V
Temperature range	- 5 °C ÷ + 70 °C
Standard	CEI 2022 II OR
Wire section	3x1 mm²

Technical data	Standard	Transparent with circuit	Moulding
Contact distance	18 mm	18 mm	18 mm
Nominal voltage	AC max 250 V; DC max 300 V	250 V	250 V
Nominal current	10 A	10 A	-
Maximum current on contacts	16 A	16 A	-
Maximum current	-	-	5 A
Contact resistance	≤ 4 m Ohm	≤ 4 m Ohm	≤ 4 m Ohm
Maximum conductor section	1,5 mm²	1,5 mm²	-
Gland size option	Pg 09	Pg 09	-
Protection class	IP 65 EN 60529	IP 65 EN 60529	IP 65 EN 60529
Insulation class	VDE 0110 - 1/89	VDE 0110 - 1/89	VDE 0110 - 1/89
Temperature range	- 40°C ÷ + 90 °C	- 40°C ÷ + 90 °C	- 40°C ÷ + 90 °C
Earth contact (number)	1	1	2, connected (6/12 pos.)
Poles	2	2	2

Plate for valves series A1

For cylinders ISO 15552

Standard executions		
Version	Code	Item
For cylinders AMA 32-40	071458	PSV/A1/AMA-32-40
For cylinders AMA 50-63	071459	PSV/A1/AMA-50-63
For cylinders AMA 80-100-125	071460	PSV/A1/AMA-80-100-125
For cylinders AMT 160-200	070822	PSV/A1/AMT-160-200

Series of plates for the direct assembly of the valves A1 to the tube (or tie-rods) of the cylinder AMA / AMT / CM.
These plates have multiple mounting holes for at least two sizes of A1 valves (depending on cylinders bore).

Material: Aluminium 11S – Anodized neutral

2

PSV/A1/AMA-32-40
(With mounting holes for A1 1/8" - 1/4")

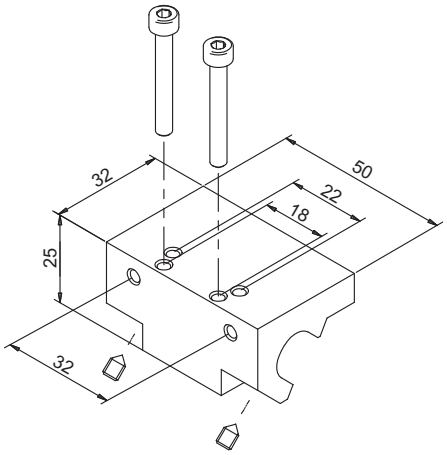

The Kit include 2 screws and 2 grains

PSV/A1/AMA-50-63
(With mounting holes for A1 1/8" - 1/4")

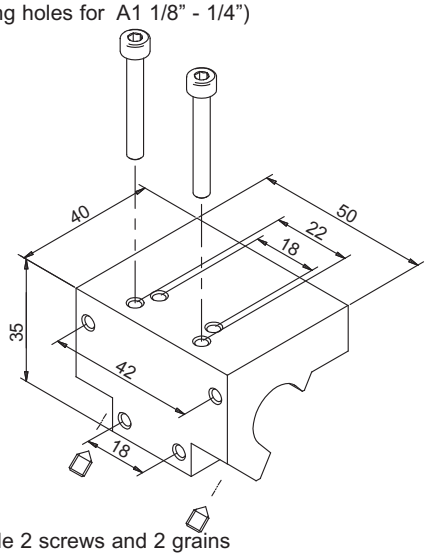

The Kit include 2 screws and 2 grains

PSV/A1/AMA-80-100-125
(With mounting holes for A1 1/8" - 1/4" - 1/2")

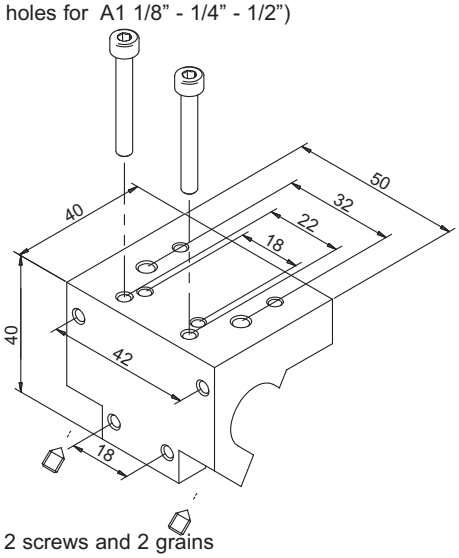

The Kit include 2 screws and 2 grains

PSV/A1/AMT-160-200
(With mounting holes for A1 1/4" - 1/2")

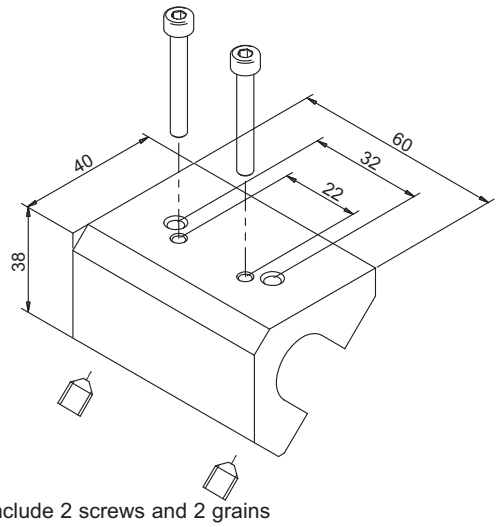

The Kit include 2 screws and 2 grains

Note

Executions

Version	Symbol	Code	Item
3/2 NC side lever, 1 position	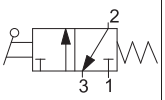	034071	A1MA130LL
3/2 side lever, 2 positions	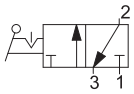	034070	A1MA132LL
3/2 top lever, 2 positions	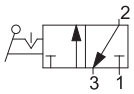	034082	A1MA132LT
3/2 NC push-pull, 1 position	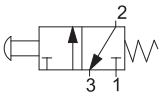	034083	A1MA130TT
3/2 push-pull, 2 positions	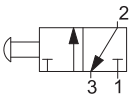	034084	A1MA132TT
3/2 NC red head push button, 1 position	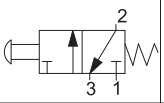	034085	A1MA130FR
3/2 NC green head push button, 1 position	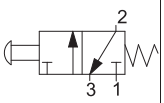	034086	A1MA130FV
3/2 NC black head push button, 1 position	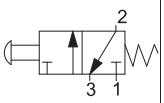	034087	A1MA130FN
3/2 NC red recessed button, 1 position	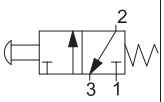	034088	A1MA130BR
3/2 NC green recessed button, 1 position	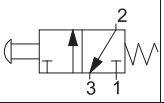	034089	A1MA130BV
3/2 NC black recessed button, 1 position	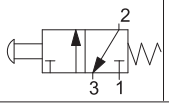	034090	A1MA130BN

Series of spool valves, with static seals, high flow, for panel or sub-base mounting.

Code key

Series	Actuation	Size	Function	Actuation
A1	MA=Manual	1 = 1/8” 2 = 1/4”	30 = 3/2 NC spring return 32 = 3/2 two stable positions 50 = 5/2 spring return 51 = 5/2 two stable positions 70 = 5/3 CC spring return 71 = 5/3 CA spring return 72 = 5/3 CP spring return 73 = 5/3 CC 3 positions 74 = 5/3 CA 3 positions 75 = 5/3 CP 3 positions	LL = side lever LT = top lever TT = push-pull FR = red head push botton FV = green head push botton FN = black head push botton BR = red recessed botton BV = green recessed botton BN = black recessed botton

On request, they can be supplied according Directive 94/9/EC - **ATEX**
CE Ex **II 2 GDc T5**

Technical data

Fluid	Compressed filtered air with or without lubrication. Lubrication, if be used, must be continous.
Pressure range	0 ÷ 10 bar
Temperature range	-10 °C ÷ + 80°C
Orifice	6,5 mm
Flow	650 Nl/min at 6 bar with ΔP 1 bar
Mounting	In any position
Materials	Body: Aluminium Cover: Aluminium Bottom plates: Plastic Spool: Chemical nickel plated aluminium Distancers: Plastic Seals: Nitrile rubber (NBR) Lever: Steel

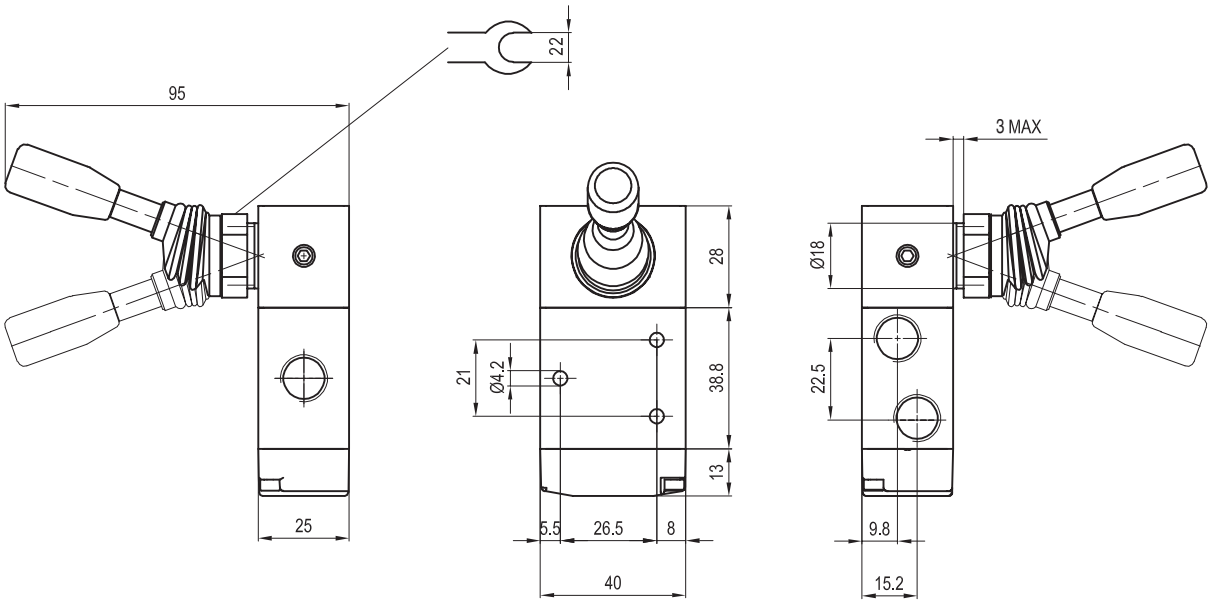

Version	Symbol	Code	Item
3/2 NC side lever, 1 position	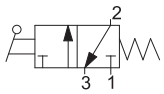	034071	A1MA130LL
3/2 side lever, 2 positions	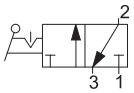	034070	A1MA132LL

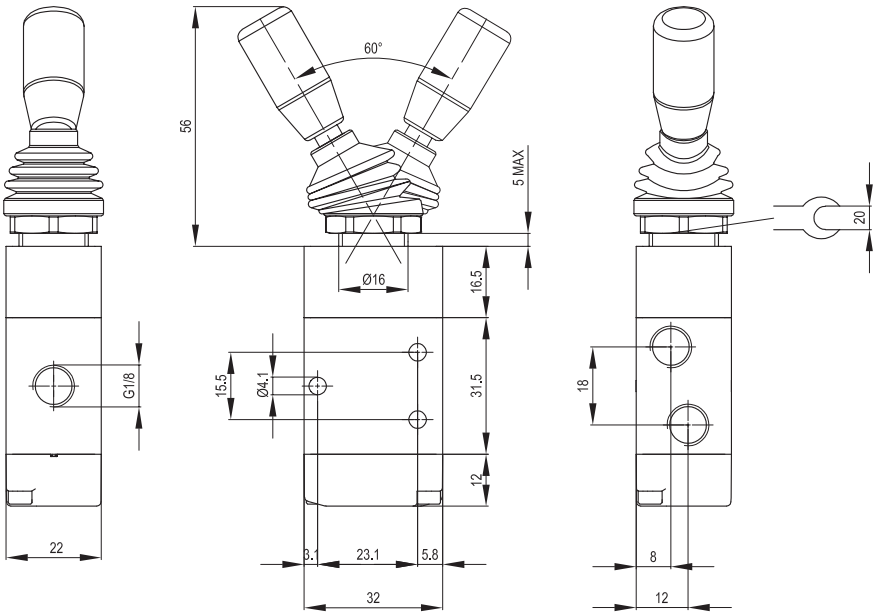

Version	Symbol	Code	Item
3/2 top lever, 2 positions	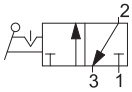	034082	A1MA132LT

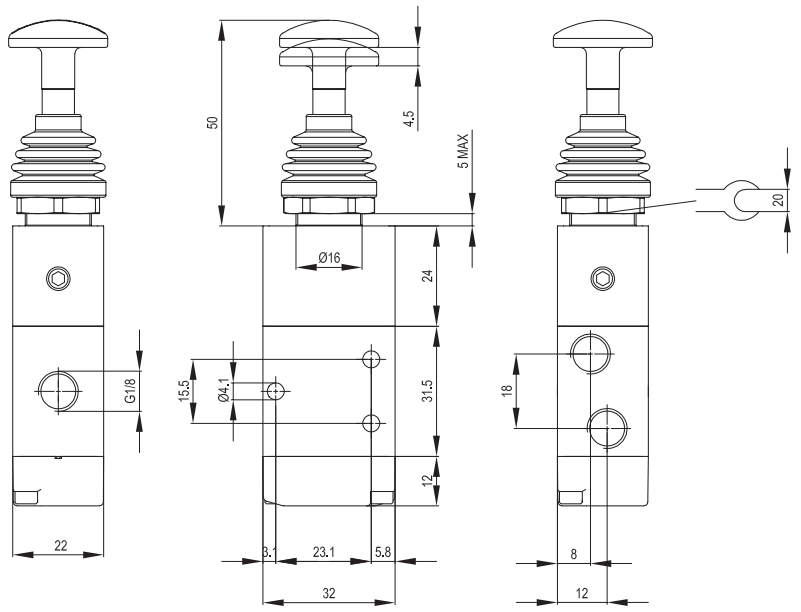

Version	Symbol	Code	Item
3/2 NC push-pull, 1 position	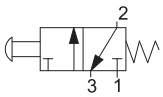	034083	A1MA130TT
3/2 push-pull, 2 positions	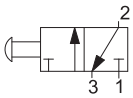	034084	A1MA132TT

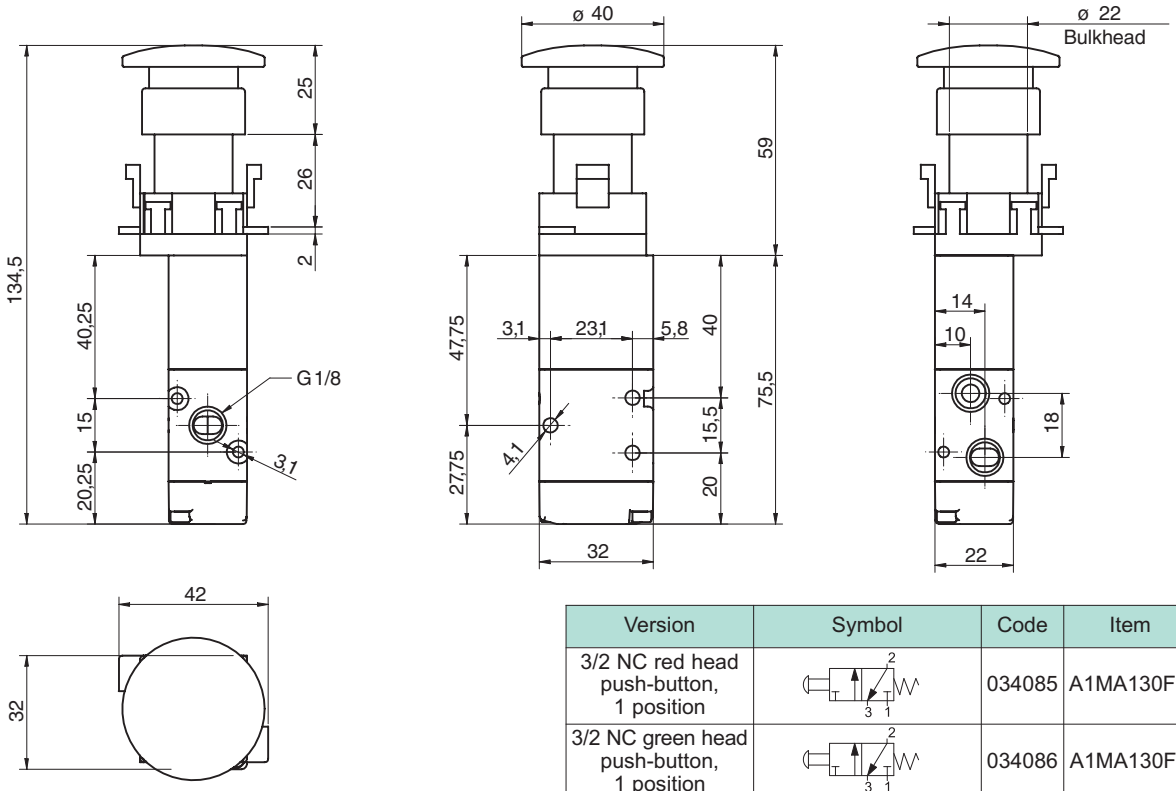

Version	Symbol	Code	Item
3/2 NC red head push-button, 1 position		034085	A1MA130FR
3/2 NC green head push-button, 1 position	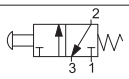	034086	A1MA130FV
3/2 NC black head push-button, 1 position	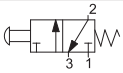	034087	A1MA130FN

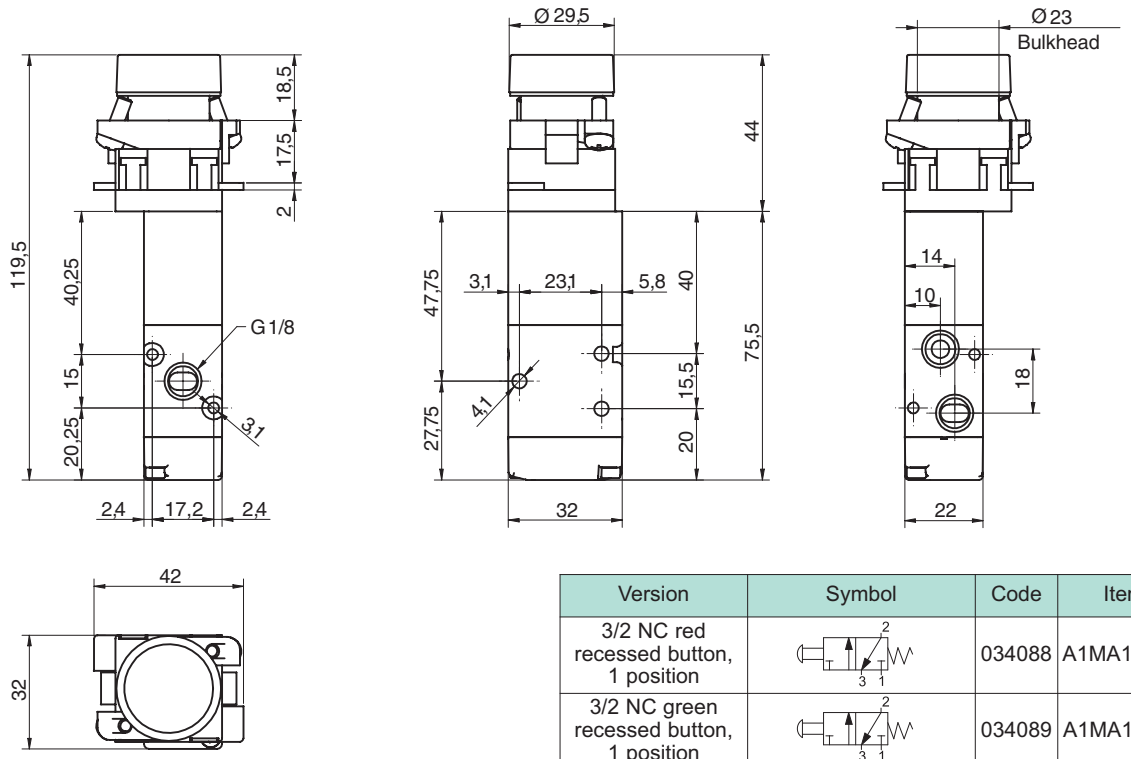

Version	Symbol	Code	Item
3/2 NC red recessed button, 1 position		034088	A1MA130BR
3/2 NC green recessed button, 1 position	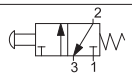	034089	A1MA130BV
3/2 NC black recessed button, 1 position	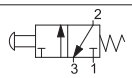	034090	A1MA130BN

Valves series A1

1/8”, 5/2 - 5/3, manually operated

Executions

Version	Symbol	Code	Item
5/2 side lever 1 position	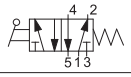	034064	A1MA150LL
5/2 side lever 2 positions	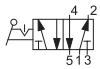	034063	A1MA151LL
5/3 side lever closed centres, 1 position	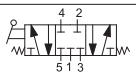	034062	A1MA170LL
5/3 side lever open centres, 1 position	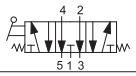	034066	A1MA171LL
5/3 side lever pressurised centres, 1 position	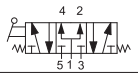	034065	A1MA172LL
5/3 side lever closed centres, 3 positions	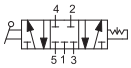	034068	A1MA173LL
5/3 side lever open centres, 3 positions	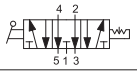	034067	A1MA174LL
5/3 side lever pressurised centres, 3 positions	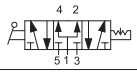	034069	A1MA175LL
5/2 top lever 2 positions	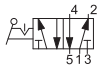	034091	A1MA151LT
5/2 push-pull 1 position	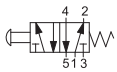	034092	A1MA150TT
5/2 push-pull 2 positions	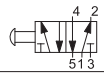	034093	A1MA151TT
5/2 red head push button, 1 position	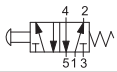	034094	A1MA150FR
5/2 green head push button, 1 position	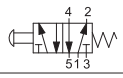	034095	A1MA150FV
5/2 black head push button, 1 position	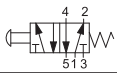	034096	A1MA150FN
5/2 red recessed button, 1 position	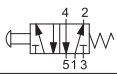	034097	A1MA150BR
5/2 green recessed button, 1 position	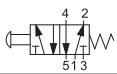	034098	A1MA150BV
5/2 black recessed button, 1 position	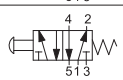	034099	A1MA150BN

Series of spool valves, with static seals, high flow, for panel or sub-base mounting.

Code key

Series	Actuation	Size	Function	Actuation
A1	MA=Manual	1 = 1/8” 2 = 1/4”	30 = 3/2 NC spring return 32 = 3/2 two stable positions 50 = 5/2 spring return 51 = 5/2 two stable positions 70 = 5/3 CC spring return 71 = 5/3 CA spring return 72 = 5/3 CP spring return 73 = 5/3 CC 3 positions 74 = 5/3 CA 3 positions 75 = 5/3 CP 3 positions	LL = side lever LT = top lever TT = push-pull FR = red head push botton FV = green head push botton FN = black head push botton BR = red recessed botton BV = green recessed botton BN = black recessed botton

On request, they can be supplied according Directive 94/9/EC - **ATEX**
CE Ex **II 2 GDc T5**

Technical data

Fluid	Compressed filtered air with or without lubrication. Lubrication, if be used, must be continous.
Pressure range	0 ÷ 10 bar
Temperature range	-10 °C ÷ + 80°C
Orifice	6,5 mm
Flow	650 Nl/min at 6 bar with ΔP 1 bar
Mounting	In any position
Materials	Body: Aluminium Cover: Aluminium Bottom plates: Plastic Spool: Chemical nickel plated aluminium Distancers: Plastic Seals: Nitrile rubber (NBR) Lever: Steel

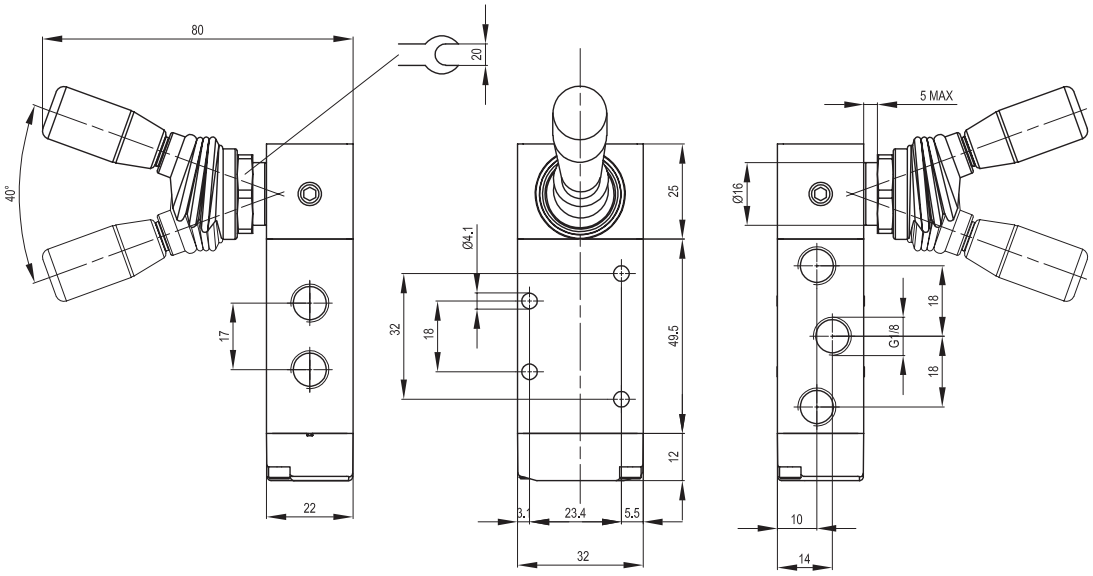

Version	Symbol	Code	Item
5/2 side lever, 1 position	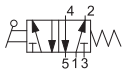	034064	A1MA150LL
5/2 side lever, 2 positions		034063	A1MA151LL

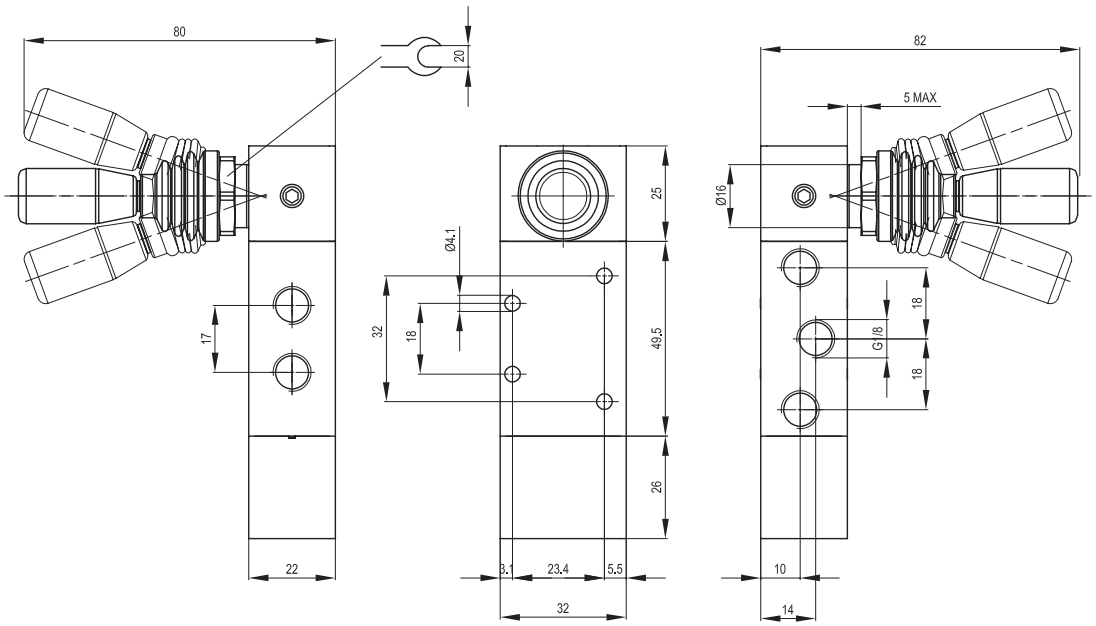

Version	Symbol	Code	Item
5/3 side lever, closed centres, 1 position	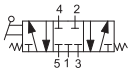	034062	A1MA170LL
5/3 side lever, open centres, 1 position	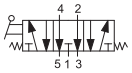	034066	A1MA171LL
5/3 side lever, pressurised centres, 1 position	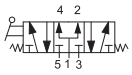	034065	A1MA172LL

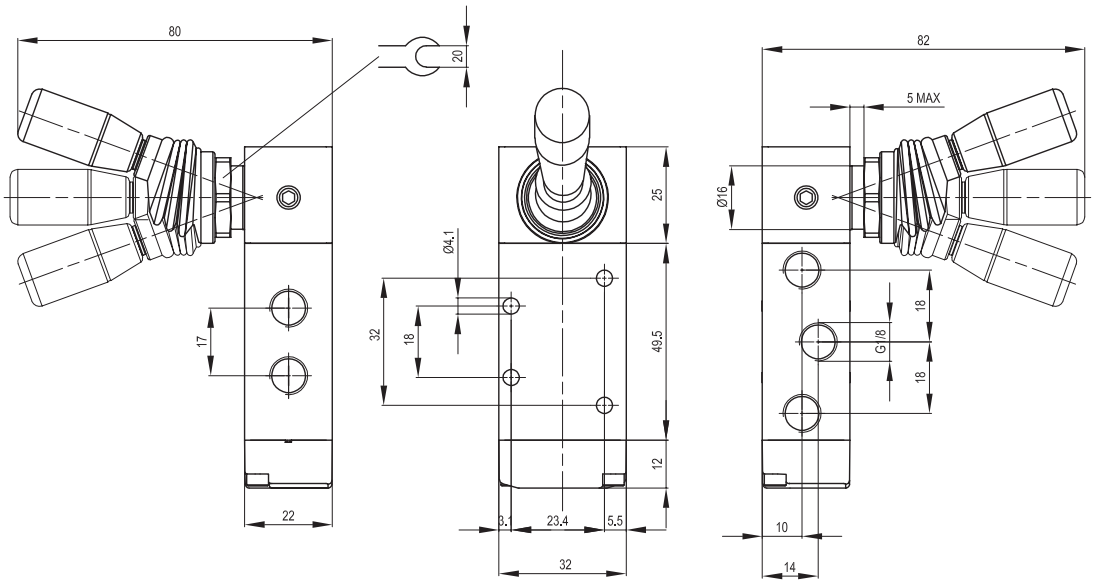

Version	Symbol	Code	Item
5/3 side lever, closed centres, 3 positions	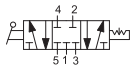	034068	A1MA173LL
5/3 side lever, open centres, 3 positions	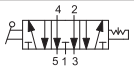	034067	A1MA174LL
5/3 side lever, pressurised centres, 3 positions	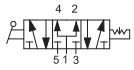	034069	A1MA175LL

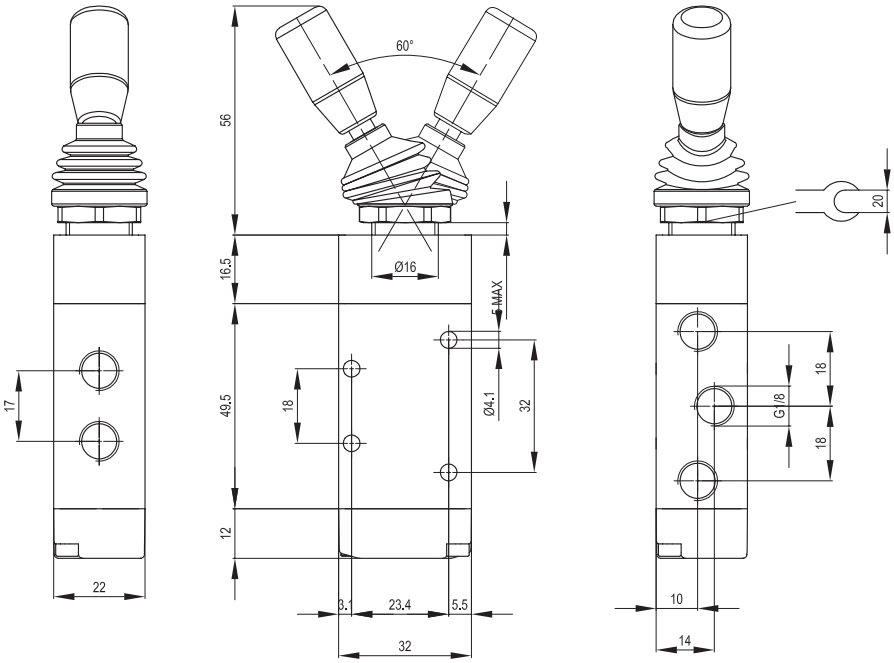

Versione	Version	Symbol	Code
5/2 top lever, 2 positions	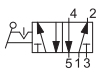	034091	A1MA151LT

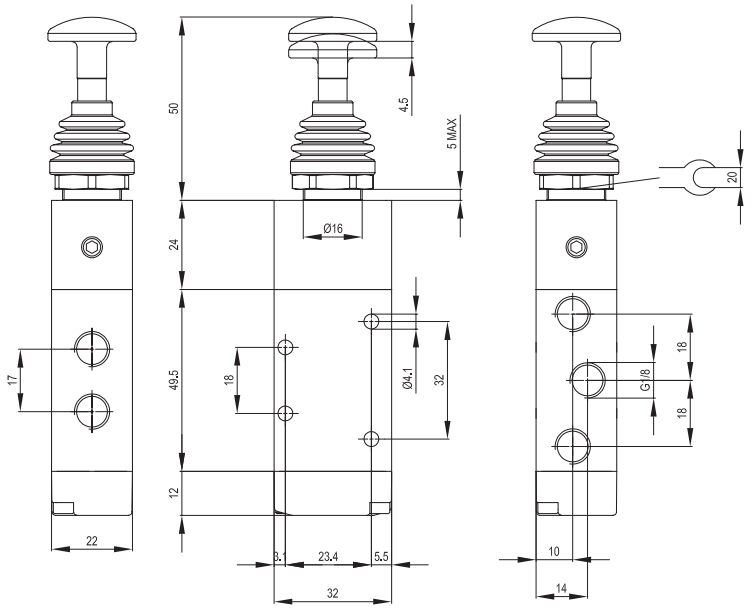

Version	Symbol	Code	Item
5/2 push-pull, 1 position	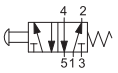	034092	A1MA150TT
5/2 push-pull, 2 positions		034093	A1MA151TT

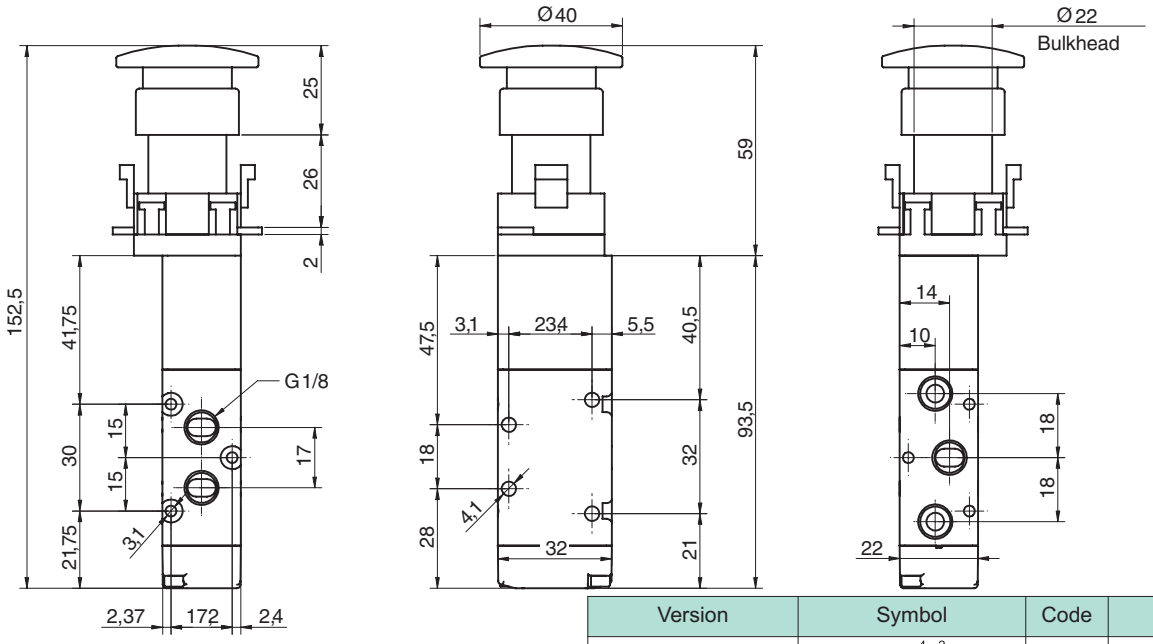

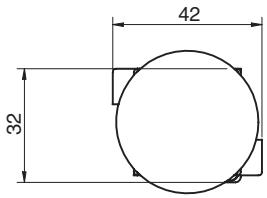

Version	Symbol	Code	Item
5/2 red head, push button, 1 position	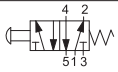	034094	A1MA150FR
5/2 red head, push button, 2 position	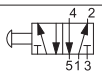	034183	A1MA151FR
5/2 green head, push button, 1 position	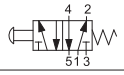	034095	A1MA150FV
5/2 black head, push button, 1 position	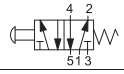	034096	A1MA150FN

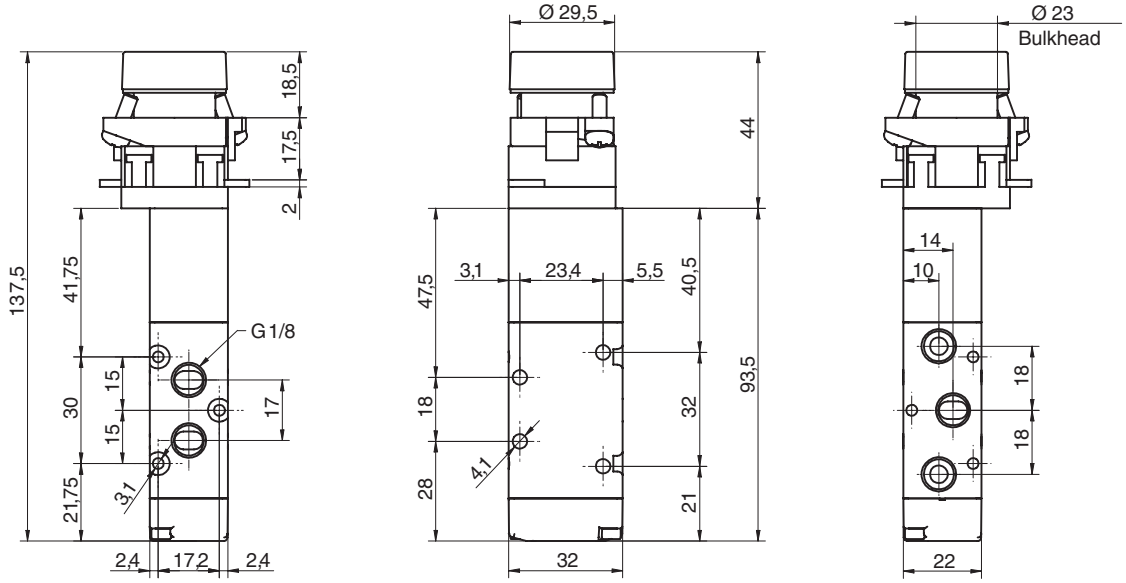

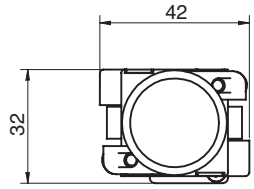

Version	Symbol	Code	Item
5/2 red recessed button, 1 position	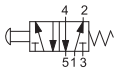	034097	A1MA150BR
5/2 green recessed button, 1 position	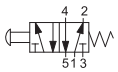	034098	A1MA150BV
5/2 black recessed button, 1 position	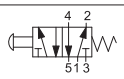	034099	A1MA150BN

2

Valves series A1

1/8”, 5/3, manually operated, open centres

Executions

Version	Symbol	Code	Item
5/3 , top lever open centres spring return	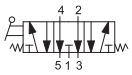	034662	A1MA171LT
5/3 , top lever open centres 3 position	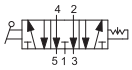	034663	A1MA174LT

Series of spool valves, with static seals, high flow.

Code key

Series	Actuation	Size	Function	Actuation
A1	MA=Manual	1 = 1/8”	71 = 5/3 CA spring return 74 = 5/3 CA 3 positions	LT = top lever

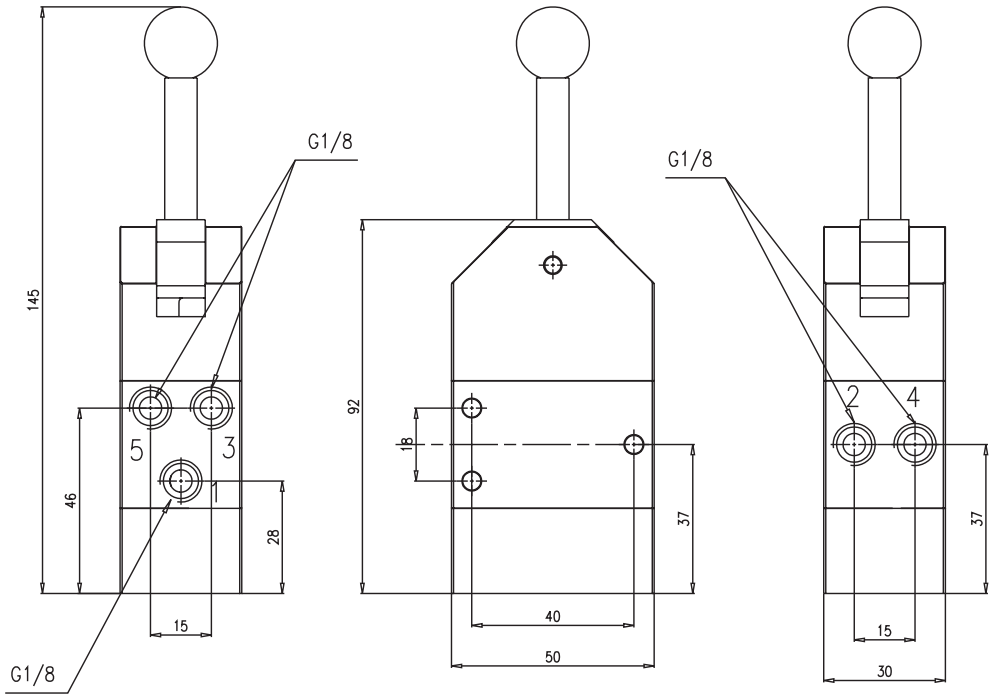

Technical data

Fluid	Compressed filtered air with or without lubrication. Lubrication, if be used, must be continous.
Pressure range	0 ÷ 10 bar
Temperature range	-10 °C ÷ + 80°C
Orifice	6,5 mm
Flow	650 Nl/min a 6 bar with ΔP 1 bar
Mounting	In any position
Materiasi	Body: Aluminium Cover: Aluminium End cap: Aluminium Spool: Chemical nickel plated aluminium Distancers: Plastic Seals: Nitrile rubber (NBR) Lever: Steel

Valves series A1

1/4”, 3/2, manually operated

Executions

Version	Symbol	Code	Item
3/2 NC side lever, 1 position	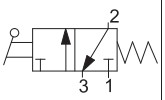	034077	A1MA230LL
3/2 side lever, 2 positions	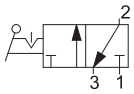	034076	A1MA232LL
3/2 top lever, 2 positions	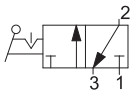	034100	A1MA232LT
3/2 NC push-pull, 1 position	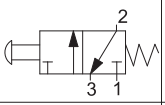	034103	A1MA230TT
3/2 push-pull, 2 positions	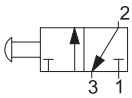	034104	A1MA232TT

Series of spool valves, with static seals, high flow, for panel or sub-base mounting.

On request, they can be supplied according Directive 94/9/EC - **ATEX**
CE Ex **II 2 GDc T5**

Code key

Series	Actuation	Size	Function	Actuation
A1	MA=Manual	1 = 1/8” 2 = 1/4”	30 = 3/2 NC spring return 32 = 3/2 two stable positions 50 = 5/2 spring return 51 = 5/2 two stable positions 70 = 5/3 CC spring return 71 = 5/3 CA spring return 72 = 5/3 CP spring return 73 = 5/3 CC 3 positions 74 = 5/3 CA 3 positions 75 = 5/3 CP 3 positions	LL = side lever LT = top lever TT = push-pull FR = red head push botton FV = green head push botton FN = black head push botton BR = red recessed botton BV = green recessed botton BN = black recessed botton

Technical data

Fluid	Compressed filtered air with or without lubrication. Lubrication, if be used, must be continous.
Pressure range	0 ÷ 10 bar
Temperature range	-10 °C ÷ + 80°C
Orifice	8 mm
Flow	1100 Nl/min at 6 bar with ΔP 1 bar
Mounting	In any position
Materials	Body: Aluminium Cover: Aluminium Bottom plates: Plastic Spool: Chemical nickel plated aluminium Distancers: Plastic Seals: Nitrile rubber (NBR) Lever: Steel

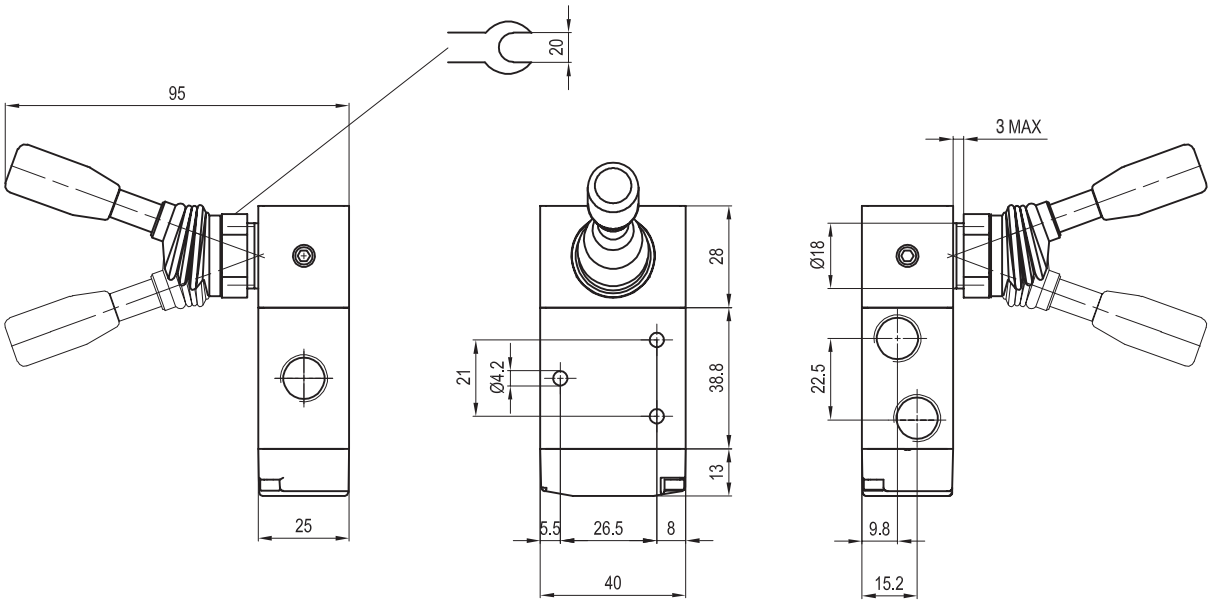

Version	Symbol	Code	Item
3/2 NC side lever, 1 position	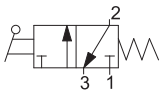	034077	A1MA230LL
3/2 side lever, 2 positions	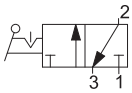	034076	A1MA232LL

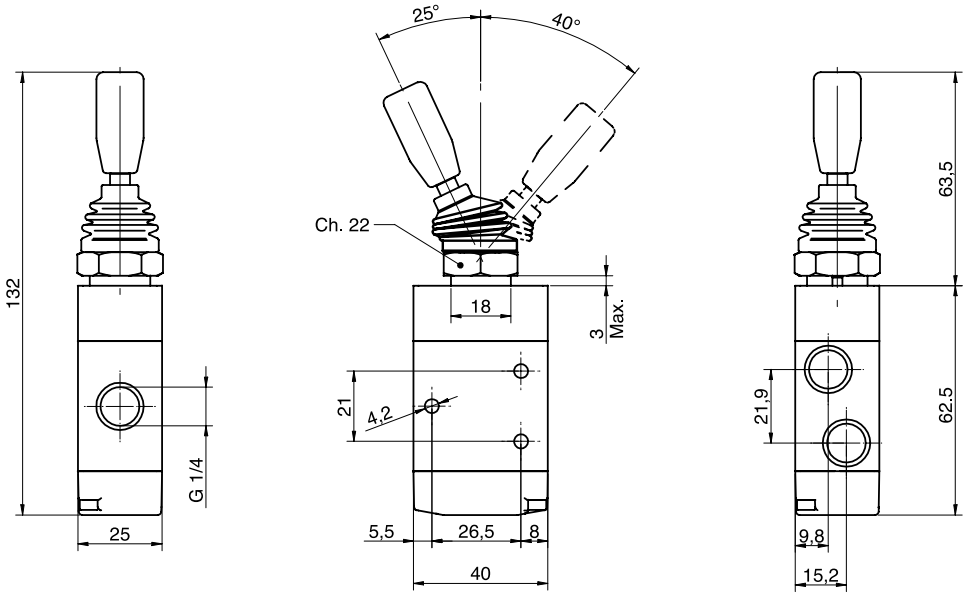

Version	Symbol	Code	Item
3/2 top lever, 2 positions	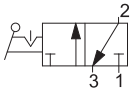	034100	A1MA232LT

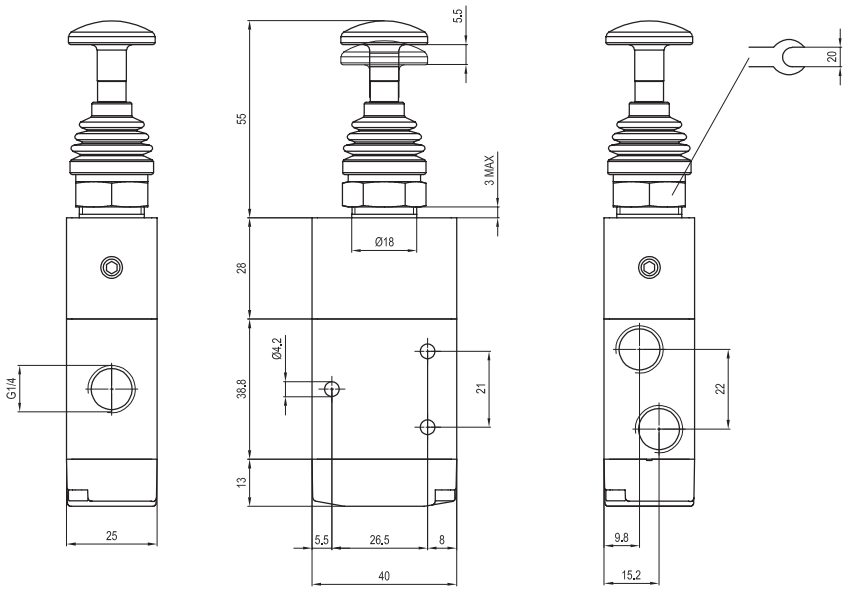

Version	Symbol	Code	Item
3/2 NC push-pull, 1 position	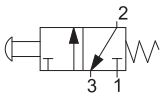	034103	A1MA230TT
3/2 push-pull, 2 positions	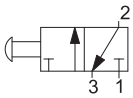	034104	A1MA232TT

Valves series A1

1/4”, 5/2 - 5/3, manually operated

Executions			
Version	Symbol	Code	Item
5/2 side lever 1 position	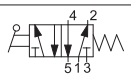	034078	A1MA250LL
5/2 side lever 2 positions	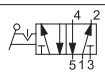	034079	A1MA251LL
5/3 side lever closed centres, 1 position	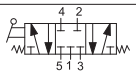	034072	A1MA270LL
5/3 side lever open centres, 1 position	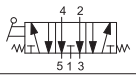	034081	A1MA271LL
5/3 side lever pressurised centres, 1 position	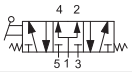	034080	A1MA272LL
5/3 side lever closed centres, 3 positions	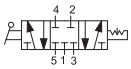	034075	A1MA273LL
5/3 side lever open centres, 3 positions	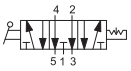	034073	A1MA274LL
5/3 side lever pressurised centres, 3 positions	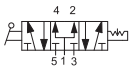	034074	A1MA275LL
5/2 top lever 2 positions	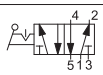	034105	A1MA251LT
5/2 push-pull 1 position	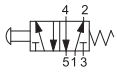	034106	A1MA250TT
5/2 push-pull 2 positions		034107	A1MA251TT

On request, they can be supplied according Directive 94/9/EC - **ATEX**
CE Ex **II 2 GDc T5**

Series of spool valves, with static seals, high flow, for panel or sub-base mounting.

Code key

Series	Actuation	Size	Function	Actuation
A1	MA=Manual	1 = 1/8” 2 = 1/4”	30 = 3/2 NC spring return 32 = 3/2 two stable positions 50 = 5/2 spring return 51 = 5/2 two stable positions 70 = 5/3 CC spring return 71 = 5/3 CA spring return 72 = 5/3 CP spring return 73 = 5/3 CC 3 positions 74 = 5/3 CA 3 positions 75 = 5/3 CP 3 positions	LL = side lever LT = top lever TT = push-pull FR = red head push botton FV = green head push botton FN = black head push botton BR = red recessed botton BV = green recessed botton BN = black recessed botton

Technical data	
Fluid	Compressed filtered air with or without lubrication. Lubrication, if be used, must be continous.
Pressure range	0 ÷ 10 bar
Temperature range	-10 °C ÷ + 80°C
Orifice	8 mm
Flow	1100 Nl/min at 6 bar with ΔP 1 bar
Mounting	In any position
Materials	Body: Aluminium Cover: Aluminium Bottom plates: Plastic Spool: Chemical nickel plated aluminium Distancers: Plastic Seals: Nitrile rubber (NBR) Lever: Steel

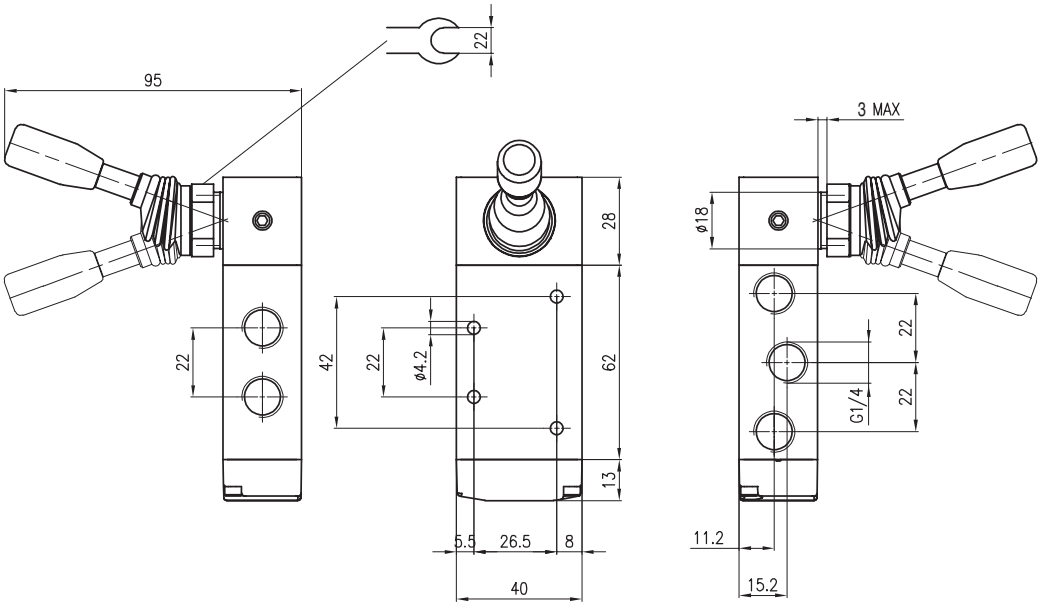

Version	Symbol	Code	Item
5/2 side lever, 1 position	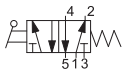	034078	A1MA250LL
5/2 side lever, 2 positions		034079	A1MA251LL

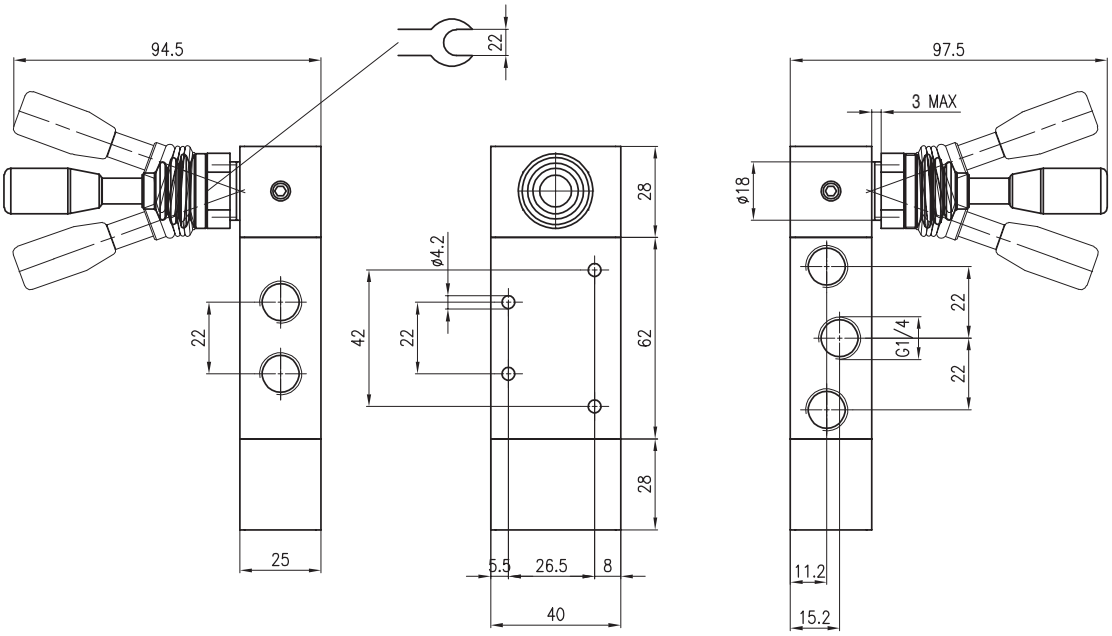

Versione	Simbolo	Codice	Articolo
5/3 side lever, closed centres, 1 position	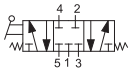	034072	A1MA270LL
5/3 side lever, open centres, 1 position	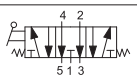	034081	A1MA271LL
5/3 side lever, pressurised centres, 1 position	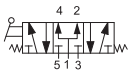	034080	A1MA272LL

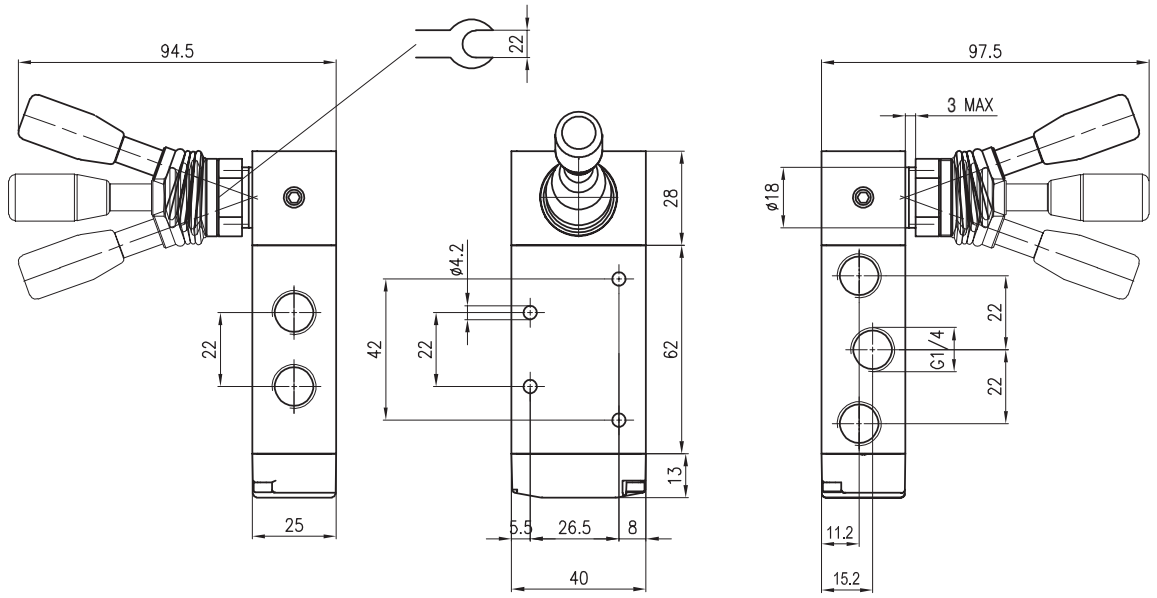

Versione	Simbolo	Codice	Articolo
5/3 side lever, closed centres, 3 positions	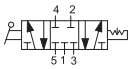	034075	A1MA273LL
5/3 side lever, open centres, 3 positions	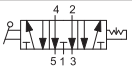	034073	A1MA274LL
5/3 side lever, pressurised centres, 3 positions	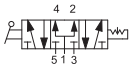	034074	A1MA275LL

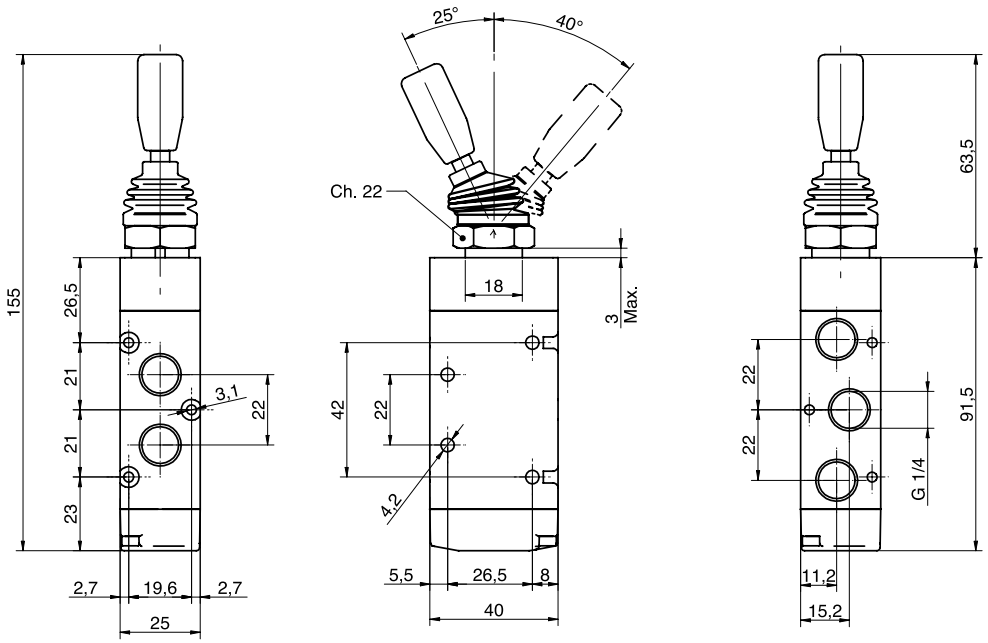

Versione	Simbolo	Codice	Articolo
5/2 top lever, 2 positions		034105	A1MA251LT

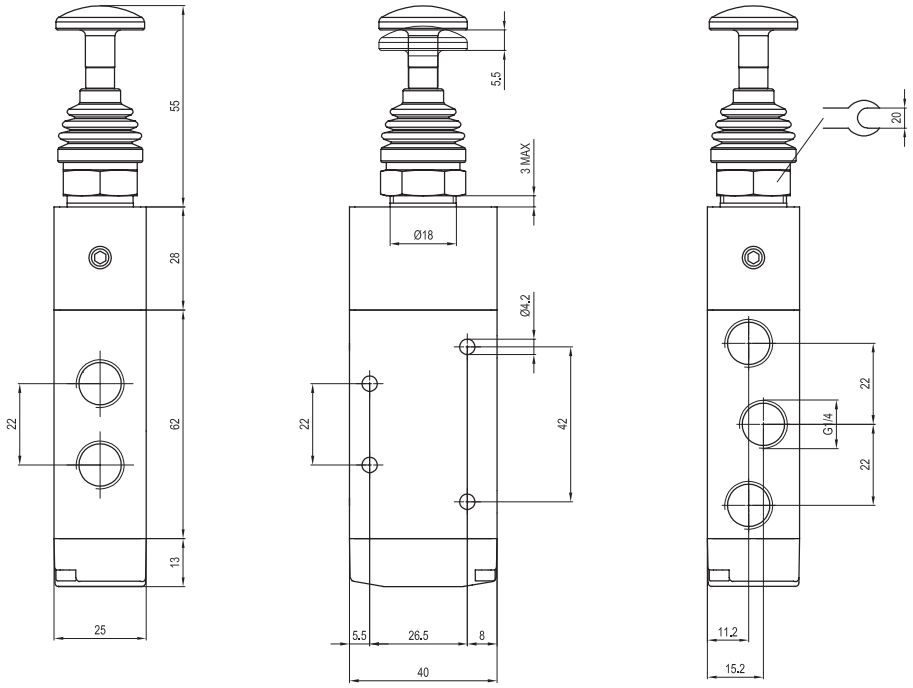

Versione	Simbolo	Codice	Articolo
5/2 push-pull, 1 position	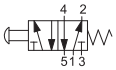	034106	A1MA250TT
5/2 push-pull, 2 positions		034107	A1MA251TT

2

Note

Foot operated valves ø4, M5 and 1/4”

ø4-M5, 3/2 normally closed and 5/2 foot single stable position

Executions			
Version	Symbol	Code	Item
3/2, normally closed with integral 4 mm push-in fittings	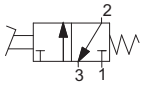	033173	ACP04132C
3/2, normally open with integral 4 mm push-in fittings	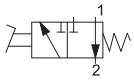	033174	ACP04132A
3/2, normally closed with M5 ports	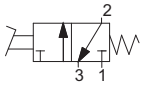	033175	ACP05132C
5/2, 1 position with integral 4 mm push-in fittings	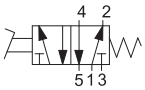	033177	ACP041520
5/2, 1 position with M5 ports	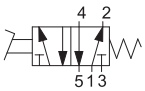	033178	ACP051520
Yellow protection cover		033179	ACP0405P

Series of pedals at low flow and with reduced dimensions, single stable position and with poppet valve.
In the standard version they are without protection; the protection cover type ACP0405P can be applied later on and is supplied separately.
They can be supplied with M5 ports valve or with integral 4 mm push-in fittings.

2

type: **ACP04...**
ACP05...

type: **ACP0405P**

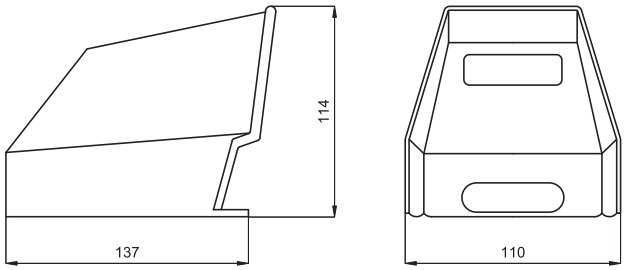

Technical data		
Fluid	Compressed filtered air with or without lubrication. Lubrication, if be used, must be continous.	
Pressure range	2 ÷ 10 bar	
Temperature range	-15 °C ÷ + 60°C	
Orifice	2,5 mm	
Flow	100 Nl/min	
Operating force	24 N	
Materials	Housing:	Black zinc plated steel
	Valve body:	Profiled anodised aluminium
	Valve internal parts:	Nickel plated brass/Stainless steel - Seals: NBR
	Protection cover:	Shock-resistant acetal resin

Foot operated valves ø4, M5 and 1/4”

1/4”, 3/2 and 5/2 foot single and two stable position

Executions			
Version	Symbol	Code	Item
3/2, normally closed, 1 position with safety device	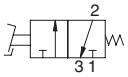	033127	AVP230
3/2 normally closed, 2 positions with safety device	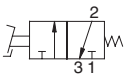	033128	AVP232
5/2, 1 position with safety device	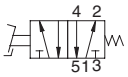	033129	AVP250
5/2, 2 positions with safety device	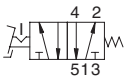	033133	AVP251

Series of pedals with 3/2 or 5/2 valve, single and two stable position.
In the standard version they are provided with 1/4” spool valve and yellow shock-resistant protection in acetal resin and safety device to avoid possible improper actuations.

type: **AVP2...**

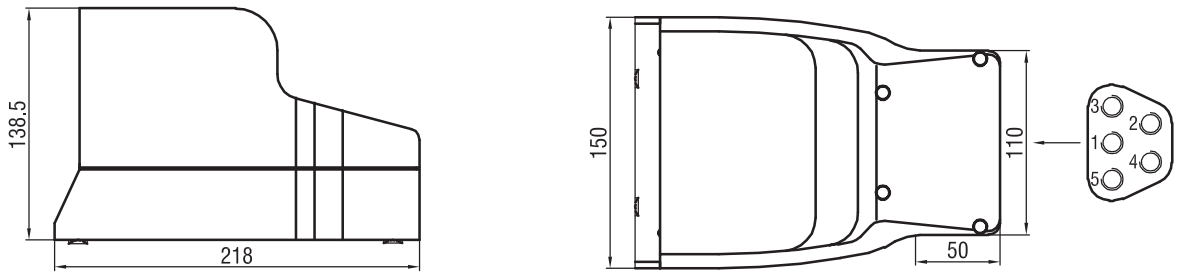

Technical data		
Fluid	Compressed filtered air with or without lubrication. Lubrication, if be used, must be continous.	
Pressure range	2,5 ÷ 10 bar	
Temperature range	0 °C ÷ + 50 °C	
Orifice	8,5 mm	
Flow	1000 Nl/min	
Operating force	50 N	
Materials	Housing:	Shock-resistant acetal resin
	Valve body:	Profiled anodised aluminium
	Valve internal parts:	Nickel plated brass/Nickel plated aluminium/Stain-less steel - Seals: NBR
	Protection cover:	Shock-resistant acetal resin

Executions

Version	Symbol	Code	Item
Normally open	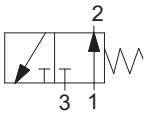	030251	AM04132A
Normally closed	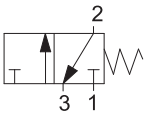	030252	AM04132C
Normally open with side connections	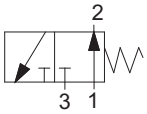	030253	AM04132AL
Normally closed with side connections	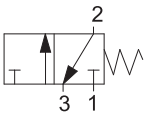	030254	AM04132CL

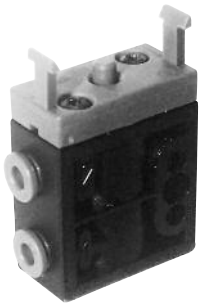

Series of poppet microvalves arranged for operating manually.
Connections with integral 4 mm push-in fittings.
According to the application you can choose between the version with bottom connections or with side ones.
For the choice of the operating device see page 2.265.1.

type: **AM04132A**
AM04132C

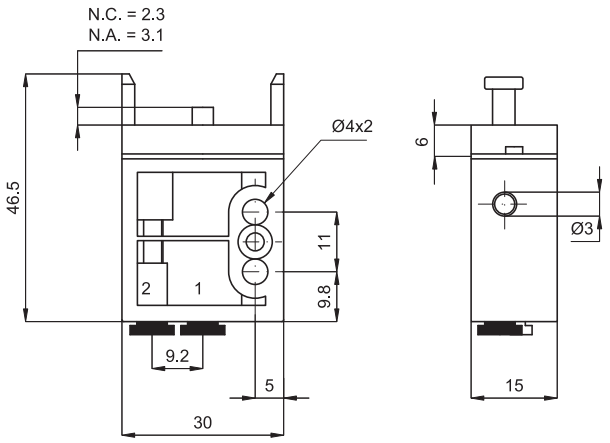

type: **AM04132AL**
AM04132CL

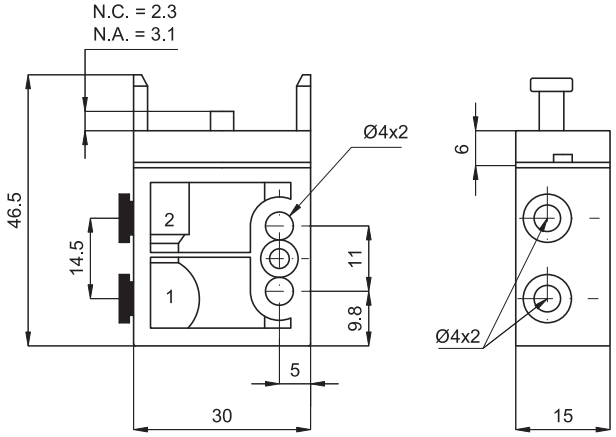

Technical data

Fluid	Compressed filtered air with or without lubrication. Lubrication, if be used, must be continous.
Pressure range	0 ÷ 8 bar
Temperature range	-20 °C ÷ + 80 °C
Operating force	5 N
Flow	80 Nl/min.
Connections	With integral 4 mm push-in fittings
Fixing	Through 2 holes (ø 4 mm) on the body
	Through 1 hole (ø 22 mm) on panel (with operating device mounted)
Mounting	In any position
Materials	Body: Acetal resin Seals: Nitrile rubber (NBR)

Microvalves ø 4, 5/2 normally open and normally closed

Executions			
Version	Symbol	Code	Item
5/2, 1 position	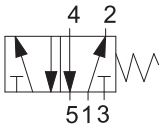	030261	AM041520
5/2, 1 position with side connections		030262	AM041520L

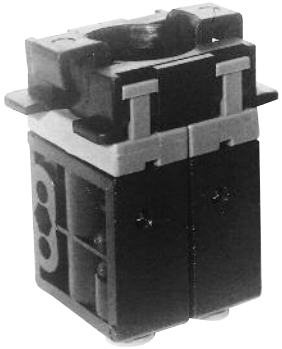

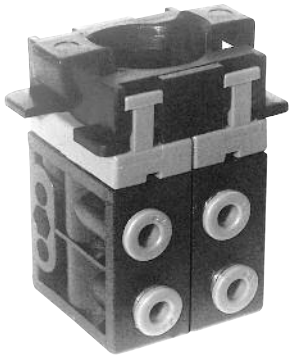

Series of poppet microvalves arranged for operating manually.
Connections with integral 4 mm push-in fittings.
According to the application you can choose between the version with bottom connections or with side ones.
For the choice of the operating device see page 2.265.1.

type: **AM041520**

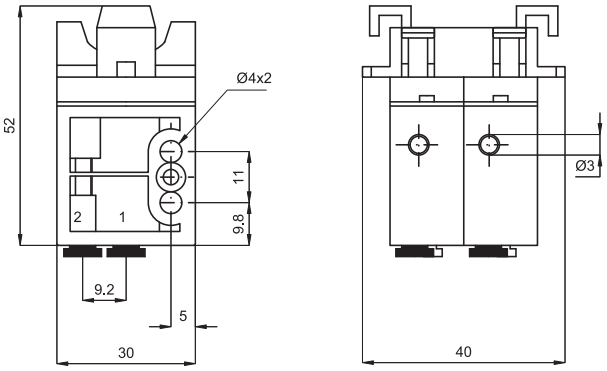

type: **AM041520L**

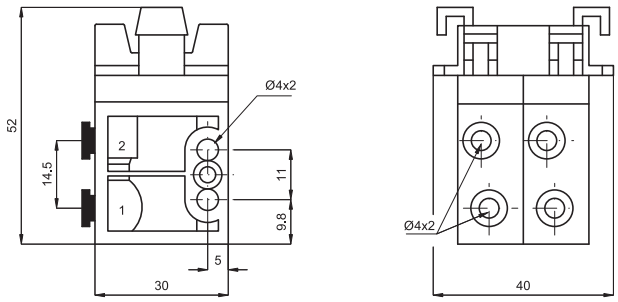

Technical data	
Fluid	Compressed filtered air with or without lubrication. Lubrication, if be used, must be continous.
Pressure range	0 ÷ 8 bar
Temperature range	-20 °C ÷ + 80 °C
Operating force	10 N
Flow	80 Nl/min.
Connections	With integral 4 mm push-in fittings
Fixing	Through 2 holes (ø 4 mm) on the body
	Through 1 hole (ø 22 mm) on panel (with operating device mounted)
Mounting	In any position
Materials	Body: Acetal resin Seals: Nitrile rubber (NBR)

Executions			
Version	Symbol	Code	Item
Red recessed button, 1 position	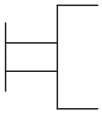	030271	AP11R
Black recessed button, 1 position	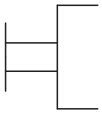	030272	AP11N
Green recessed button, 1 position	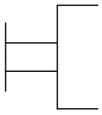	030273	AP11V
Red head push button, 1 position	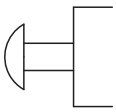	030274	AP21R
Red head push button, 2 positions	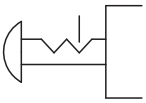	030275	AP22R
Black selector, 2 positions	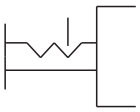	030276	AP32N
Black selector, 3 positions	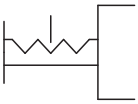	030277	AP33N
Selector with key, 2 positions	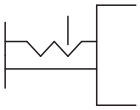	030278	AP42C
Black lever, 3 positions	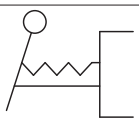	030279	AP53N

The head push button 2 positions type AP22R can only be used with the valves normally open.

Series of operating devices available in different solutions (selector, recessed button, head push button etc.).
Quick mounting on bayonet.
They are arranged for mounting on panel (through 22 mm hole).
For the valves type AM04...

Material:	Acetal resin

type: **AP11**

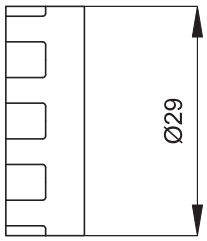

type: **AP21R**

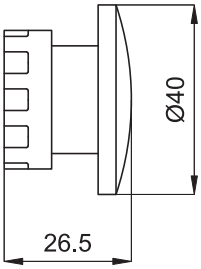

type: **AP22R**

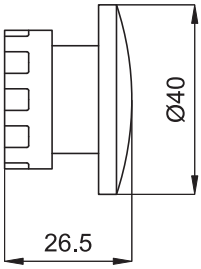

type: **AP32N**
AP33N

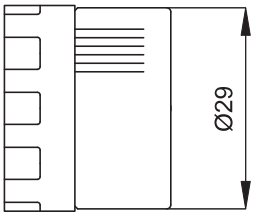

type: **AP42C**

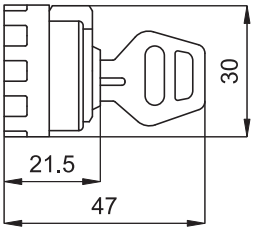

type: **AP53N**

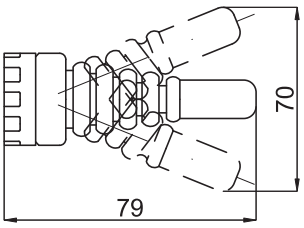

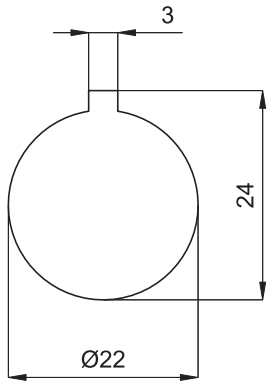

Dimensions of the hole for panel mounting.
The panel must not be thicker than 6 mm.

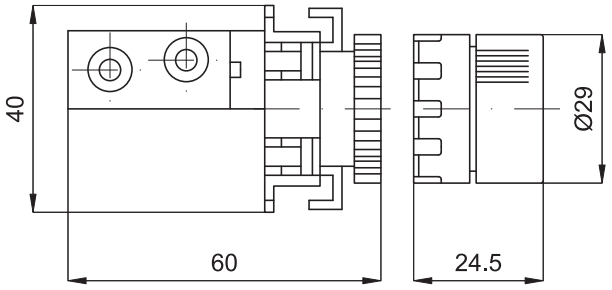

Valve with side connections

Maximum overall dimensions

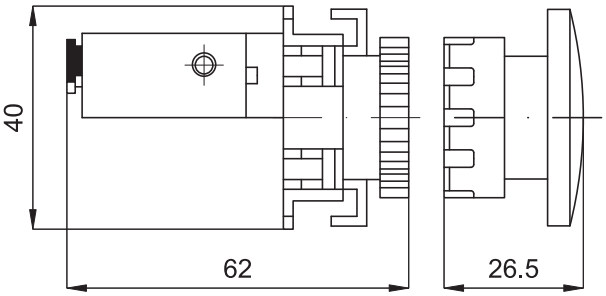

Valve with standard connections

Mechanically operated valves ø 4 and 1/8''

ø 4, 3/2 normally open and normally closed

Executions			
Version	Symbol	Code	Item
3/2, with plunger, N.O.	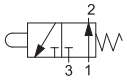	032291	AC104132A
3/2, with plunger, N.C.	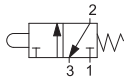	032292	AC104132C
3/2, with plunger, N.O., with side connections	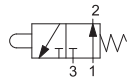	032293	AC104132AL
3/2, with plunger, N.C., with side connections	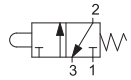	032294	AC104132CL
3/2, with bi-directional lever and roller, N.O.	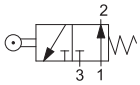	032295	AC204132A
3/2, with bi-directional lever and roller, N.C.	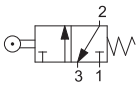	032296	AC204132C
3/2, with bi-directional lever and roller, N.O., with side connections	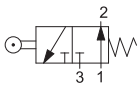	032297	AC204132AL
3/2, with bi-directional lever and roller, N.C., with side connections	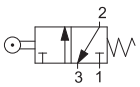	032298	AC204132CL
3/2, with uni-directional lever, N.O.	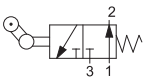	032299	AC304132A
3/2, with uni-directional lever, N.C.	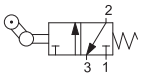	032303	AC304132C
3/2, with uni-directional lever, N.O., with side connections	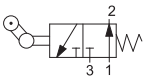	032301	AC304132AL
3/2, with uni-directional lever, N.C., with side connections	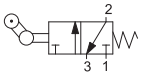	032302	AC304132CL

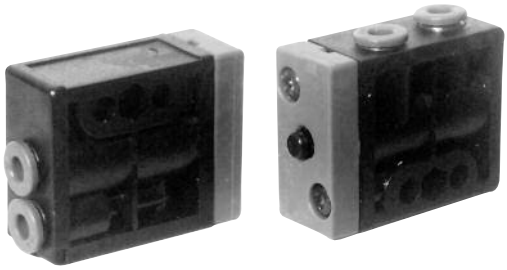

Series of poppet microvalves mechanically operated.
Connections with integral 4 mm push-in fittings.
According to the application you can choose between the version with bottom connections or side ones.

2

Technical data		
Fluid	Compressed filtered air with or without lubrication. Lubrication, if be used, must be continous.	
Pressure range	0 ÷ 8 bar	
Temperature range	-20 °C ÷ + 80°C	
Operating force	5 N	
Flow	80 Nl/min	
Connections	With integral 4 mm push-in fittings	
Fixing	Through 4 mm holes on the body	
Mounting	In any position	
Materials	Body:	Acetal resin
	Seals:	Nitrile rubber (NBR)

type: **AC104132A**
AC104132C

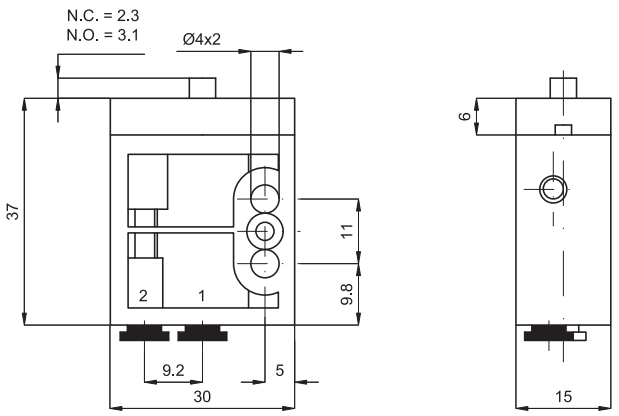

type: **AC104132AL**
AC104132CL

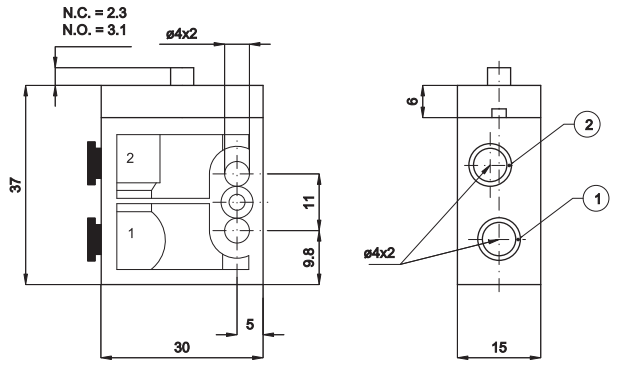

Mechanically operated valves ø 4 and 1/8’’

1/8’’, 3/2 normally closed and 5/2 single stable position

Executions			
Version	Symbol	Code	Item
3/2, with plunger, N.C.	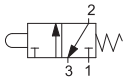	032600	AC118132C
5/2, with plunger, 1 position	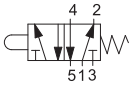	032640	AC1181520
3/2, with bi-directional lever and roller, N.C.	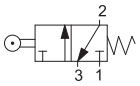	032680	AC218132C
5/2, with bi-directional lever and roller, 1 position	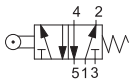	032720	AC2181520
3/2, with uni-directional lever and roller, N.C.	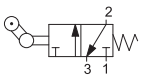	032700	AC318132C
5/2, with uni-directional lever and roller, 1 position	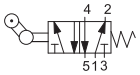	032740	AC3181520

Series of spool valves mechanically operated (plunger, bi-directional and uni-directional lever)

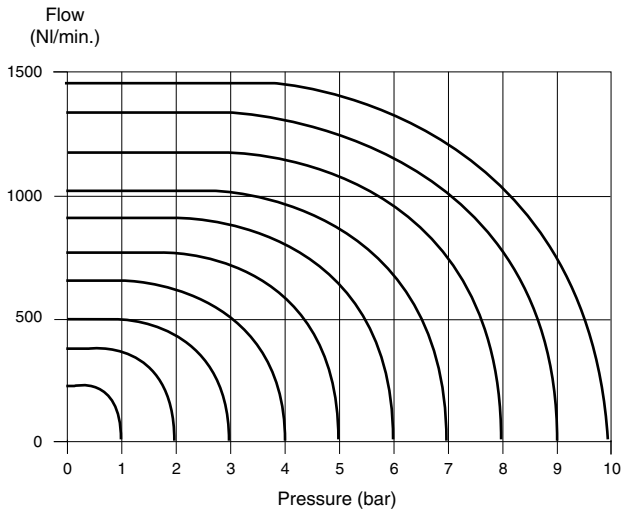

Technical data		
Fluid	Compressed filtered air with or without lubrication. Lubrication, if be used, must be continous.	
Pressure range	1 ÷ 10 bar	
Temperature range	-10 °C ÷ + 60°C	
Orifice	6 mm	
Flow	900 Nl/min	
Connections	1/8”	
Fixing	Through holes on the body	
Mounting	In any position	
Materials	Body:	Painted die-cast aluminium
	Heads:	Plastic
	Seals:	Nitrile rubber (NBR)

Mechanically operated valves ø 4 and 1/8”

1/8”, 3/2 normally closed and 5/2 single stable position

type: **AC118132C**

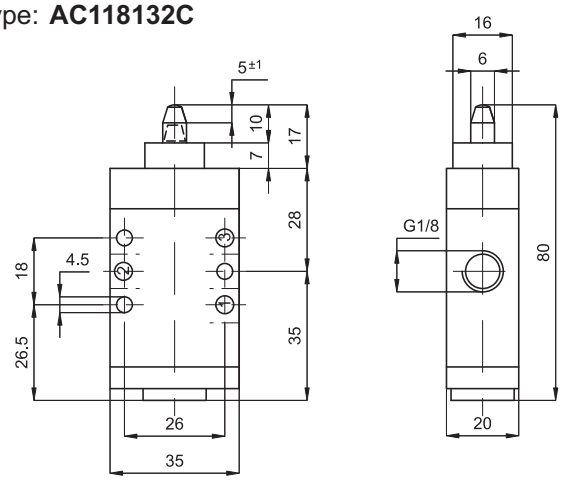

type: **AC1181520**

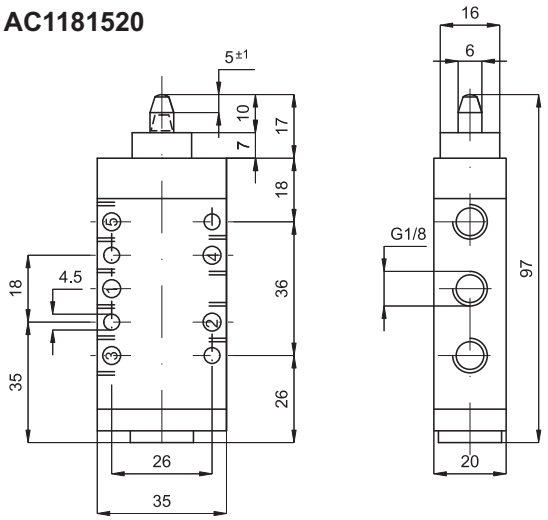

type: **AC218132C**

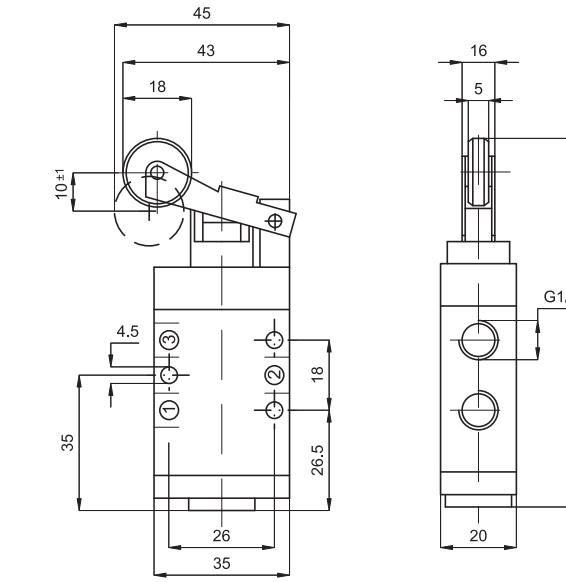

type: **AC2181520**

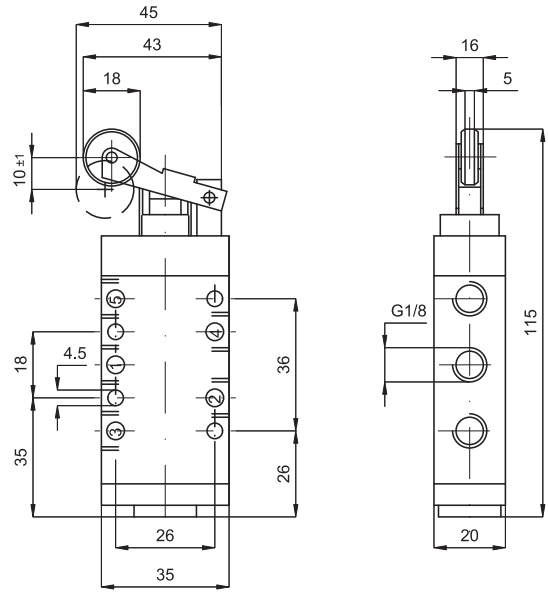

type: **AC318132C**

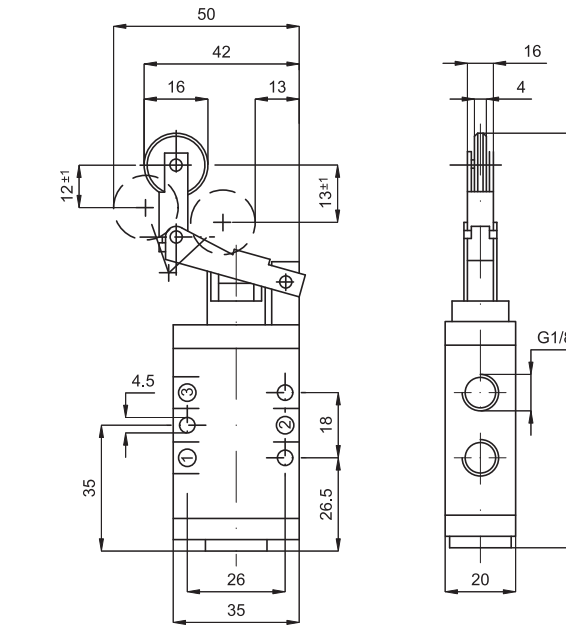

type: **AC3181520**

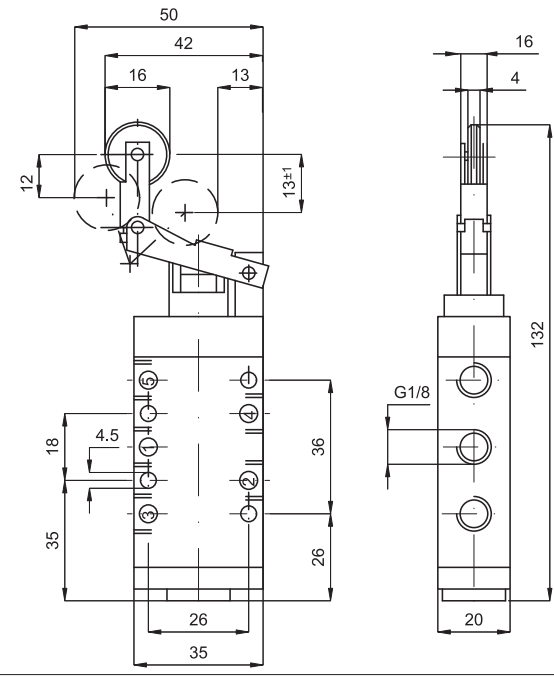

Executions			
Version	Symbol	Code	Item
M5 blue	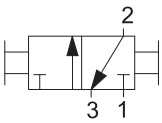	030701	V260005
1/8” blue		030702	V260018
1/4” blue		030703	V260014
3/8” blue		030704	V260038
1/2” blue		030705	V260012

Series of slide valves manually operated.
In line mounting they work to close the supply and at the same time exhaust the downstream circuit air.

How to order: V260018N

V260018	N
Version	Option

Options	Suffix
Black	N
Red	R
Seals FKM max 150 °C	V
Special versions on request	/ S

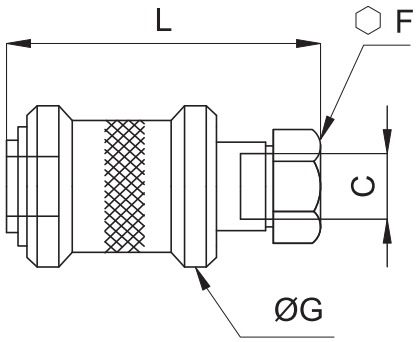

C	F	G	L
M5	9	13	31
1/8”	14	25	48
1/4”	19	30	58
3/8”	22	35	68
1/2”	27	40	80

Technical data					
Fluid	Compressed filtered air with or without lubrication. Lubrication, if be used, must be continous.				
Pressure range	0 ÷ 16 bar				
Temperature range	-10 °C ÷ + 80°C				
Orifice	M5: 2,5 mm	1/8”: 4 mm	1/4”: 7 mm	3/8”: 10 mm	1/2”: 14 mm
Flow	M5: 120 Nl/min	1/8”: 700 Nl/min	1/4”: 1.100 Nl/min	3/8”: 1.500 Nl/min	1/2”: 2.200 Nl/min
Mounting	In line				
Materials	Body: Nickel plated and ground brass Slide: Blue anodised aluminium Seals: Nitrile rubber (NBR)				

Ancillary valves

Miniature ball valves from brass hexagonal bar

Executions			
Version	Symbol	Code	Item
1/8” female - female black lever		030501	1MVSFF
1/4” female - female black lever		030502	2MVSFF
3/8” female - female black lever		030503	3MVSFF
1/2” female - female black lever		030504	4MVSFF
3/4” female - female black lever		030505	5MVSFF
1/8” male-female black lever		030601	1MVSMF
1/4” male-female black lever		030602	2MVSMF
3/8” male-female black lever		030603	3MVSMF
1/2” male-female black lever		030604	4MVSMF
3/4” male-female black lever		030605	5MVSMF

Options	Suffix
Red lever	R
Special versions on request	/ S

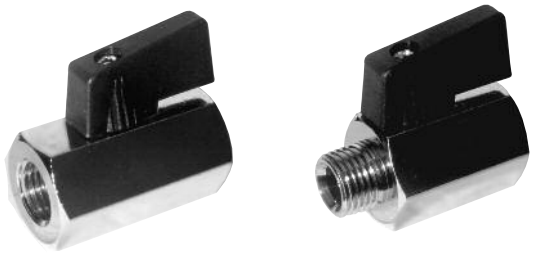

Series of miniature ball valves from brass hexagonal bar and manually operated.
In line mounting they work to close or open the flow in both directions.

How to order: 1MVSFFR

1MVSFF	R
Version	Option

type: **FF**

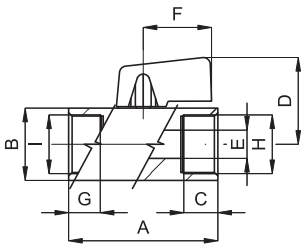

type: **MF**

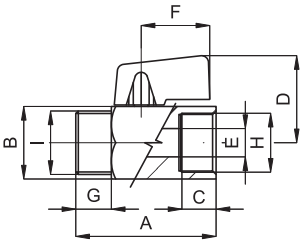

H	G	C	A	B	D	E	F
1/8”	9	9	39	21	27	6	22
1/4”	9	9	39	21	27	8	22
3/8”	10	9	41	21	27	8	22
1/2”	10,5	10,5	45	25	29	10	22
3/4”	13,5	13,5	51	30	31,5	12	22

Technical data			
Fluid	Compressed filtered air with or without lubrication		
Pressure range	0 ÷ 10 bar		
Temperature range	-10 °C ÷ + 90°C		
Orifice	See the dimension E in the table		
Mounting	In-line		
Materials	Body:	Nickel plated brass	
	Lever:	Nylon 66, reinforced glass	Ball: Nickel plated brass
	Seals:	PTFE - NBR	

Miniature ball valves with cast body

Executions			
Version	Symbol	Code	Item
1/8” female - female		030641	11MSFF
1/4” female - female		030642	22MSFF
1/8” male - female		030643	11MSMF
1/4” male 1/8” female		030644	21MSMF
1/4” male - female		030645	22MSMF
3/8” male 1/4” female		030646	32MSMF

Series of miniature ball valves with cast body, manually operated and with reduced dimensions.
In line mounting they work to close or open the flow in both directions.

type: **FF** type: **MF**

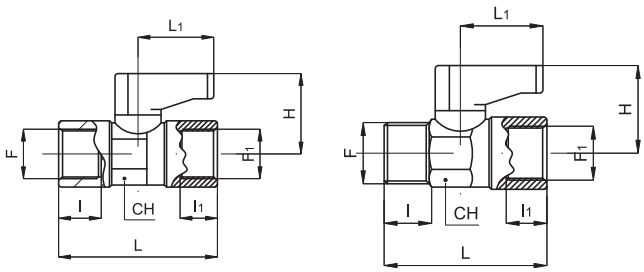

F	F_1	DN	I	I_1	L	L_1	H	CH
1/8”	1/8”	5,5	8	8	36,5	19	21	14
1/4”	1/4”	5,5	11	11	43	19	21	14
1/8”	1/8”	5,5	8	8	35,5	19	21	14
1/4”	1/8”	5,5	11	8	38,5	19	21	14
1/4”	1/4”	5,5	11	11	40,5	19	21	14
3/8”	1,4”	5,5	11,5	11	41	19	21	14

Technical data			
Fluid	Compressed filtered air with or without lubrication		
Pressure range	0 ÷ 10 bar		
Temperature range	-10 °C ÷ + 90°C		
Orifice	Vedi tabella quota DN		
Mounting	In-line		
Materials	Body:	Nickel plated brass	
	Lever:	Nylon 66, reinforced glass	Ball: Nickel plated brass
	Seals:	PTFE - NBR	

Executions			
Version	Symbol	Code	Item
1/4”		030661	VSLO014FF
3/8”		030662	VSLO038FF
1/2”		030663	VSLO012FF
3/4”		030664	VSLO034FF
1”		030665	VSLO100FF
1 1/4”		030666	VSLO114FF
1 1/2”		030667	VSLO112FF
2”		030668	VSLO200FF

Series of brass ball valves full bore with long lever and manually operated.
In line mounting they work to close or open the air flow in both directions.

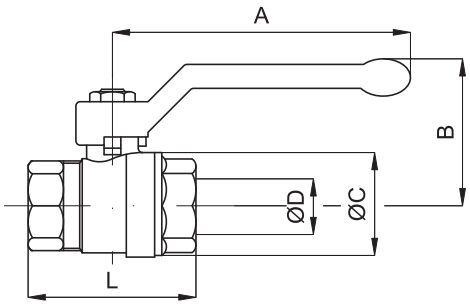

Ports	ø D	A	B	ø C	L	Weight (g)
1/4”	10	85	42	23	37	100
3/8”	10	85	42	24	42	120
1/2”	15	85	46	30	50	160
3/4”	20	105	53	38	58	285
1”	25	105	57	46	69	450
1 1/4”	32	130	70	58	81	820
1 1/2”	40	130	76	70	93	1280
2”	50	165	92	86	110	2050

Technical data					
Fluid	Compressed air, inert gases, non-aggressive fluids				
Pressure range	1/4” - 3/8”= 40 bar	1/2”-3/4”= 32 bar	1”= 25 bar	1 1/4”-1 1/2”= 20 bar	2”= 16 bar
Temperature range	-15 °C ÷ + 100°C				
Orifice	See the dimension ø D in the table				
Flow	1/4” - 3/8”= 3.000 l/min	1/2”= 11.500 l/min	3/4”= 21.000 l/min	1”= 33.000 l/min	
	1 1/4”= 50.000 l/min	1 1/2”= 84.000 l/min	2”= 97.000 l/min.		
Mounting	In-line				
Materials	Body:	Nickel plated brass			
	Lever:	Aluminium covered with aluminium		Ball: Nickel plated brass	
	Seals:	PTFE - NBR			

Executions			
Version	Symbol	Code	Item
M5	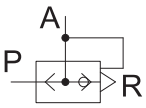	030806	7VSR
1/8”		030801	1VSR
1/4”		030802	2VSR
3/8”		030803	3VSR
1/2”		030804	4VSR
3/4”		030805	5VSR
3/4” maxi		030807	5VSRM
1” maxi		030808	6VSRM

Series of quick exhaust valves used to increase the speed of a cylinder.
The valve must be mounted directly on the port of the cylinder to achieve the maximum possible speed.
When the supply is in P the diaphragm closes the exhaust R and so the air flows through A into the chamber of the cylinder. When the supply in P fails the diaphragm closes P and this is due to the exhaust air from A to R. The noise of the exhaust can be reduced by a silencer.
For silencers see from page 4.0

How to order: 2VSRV

2VSR	V
Version	Option

Options		Suffix
Seals FKM	max 150 °C	V
Threaded NPTF		NPT

Technical data						
Fluid	Compressed filtered air with or without lubrication					
Pressure range	1 ÷ 10 bar					
Temperature range	-20 °C ÷ + 70°C					
Orifice (mm)	1/8” = 6	1/4” = 8,5	3/4” = 8,5	1/2” = 15	3/4” = 18	1” = 24
Flow from P to A						
Flow from A to R						
Mounting	Preferably directly on the port of the cylinder					
Materials	Body: Nickel plated brass Seals: Diaphragm: Polyurethane - Washer: NBR					

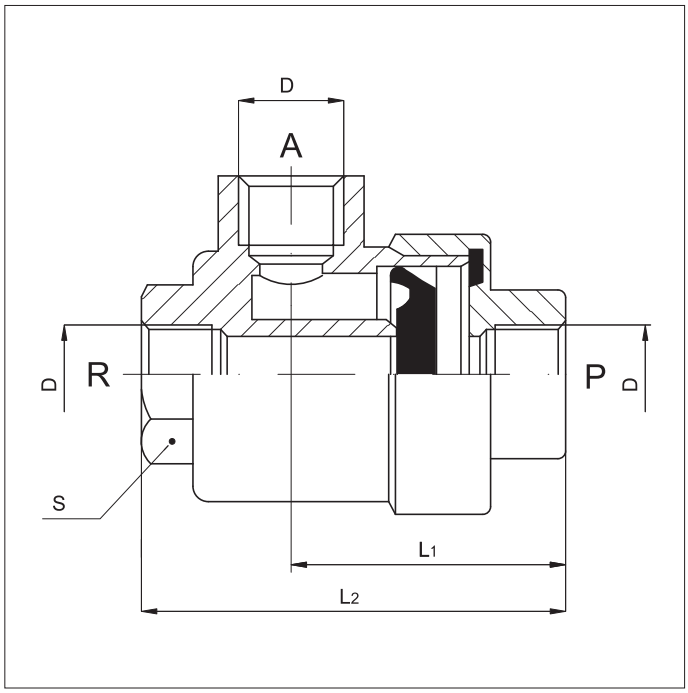

D	L_1	L_2	S
1/8”	30	46	14
1/4”	35	53	17
3/8”	37	57	21
1/2”	45	73	26
3/4”	55	90	32
M5	17	25	10
3/4” MAXI	71	110	46
1” MAXI	71	110	46

Seal kit

Valve code	Polyurethane seal code	FKM seal code	Washer code	Polyurethane seals kit code	FKM seals kit code
030806	030906	-	030913	-	-
030801	030901	030909	038018	038061	038062
030802 / 030803	030902	030903	038019	038063	038064
030804	030904	030910	038020	038065	038066
030805	030905	030908	038021	038067	038068
030807 / 030808	030907	030911	038026	038069	038070

Executions			
Version	Symbol	Code	Item
M5		030101	7FF
1/8”		030102	1FF
1/4”		030103	2FF
3/8”		030104	3FF
1/2”		030105	4FF
3/4”		030107	5FF

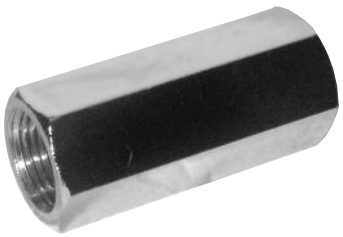

Series of uni-directional valves from brass hexagonal bar, female threaded.
In line mounting they allow the compressed air to flow in one direction only; therefore, they are useful in those applications where no return of the compressed air to the supply is admitted.

How to order: 2FFV

2FF	V
Version	Option

Varianti		Sigla
Seals FKM	max 150 °C	V
Special versions on request		/ S

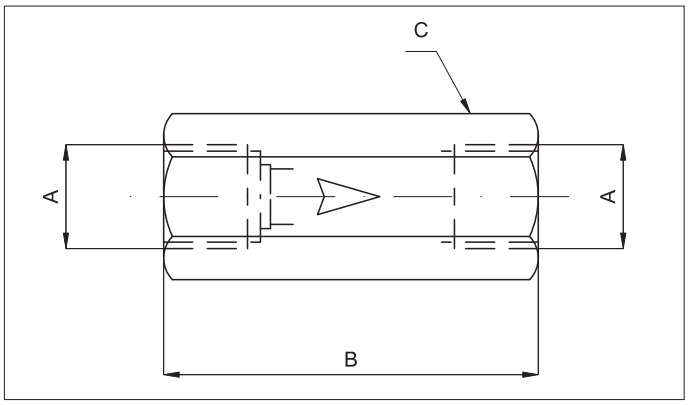

A	B	C
M5	25	8
1/8”	34	13
1/4”	39	16
3/8”	50	21
1/2”	60	25
3/4”	42	30

Technical data					
Fluid	Compressed filtered air with or without lubrication				
Pressure range	2 ÷ 10 bar				
Temperature range	-10 °C ÷ + 60°C				
Orifice	M5= 2,2 mm	1/8”= 5,2 mm	1/4”= 7 mm	3/8”= 10 mm	1/2”= 12 mm
Flow	M5= 100 Nl/min	1/8”= 500 Nl/min	1/4”= 900 Nl/min	3/8”= 2.600 Nl/min	1/2”= 3.500 Nl/min.
Mounting	In-line				
Materials	Body:	Nickel plated brass (3/4” not plated brass)			
	Internal parts:	Brass - Spring: Stainless steel			
	Seals:	Nitrile rubber (NBR) - 3/8” and 1/2” VITON			

Executions			
Version	Symbol	Code	Item
1/8”		030951	1VS
1/4”		030952	2VS
3/8”		030953	3VS
1/2”		030954	4VS
3/4”		030955	5VS
1”		030956	6VS

Series of adjustable safety valves, range from 3 to 7 bar.
For mounting on reservoirs or in those applications where the existing pressure must not exceed the fixed value.

Options	Suffix
Fixed calibration with certificate according D.E. 97/23/CE and on request ISPESL *	CC..
Special versions on request **	/ S

* The overall dimensions of the certified valve are different from the standard ones; they must be asked for. The certified valve is available with fixed calibration only (after the option suffix specify the required calibration in bar).
** Available on quantity only.

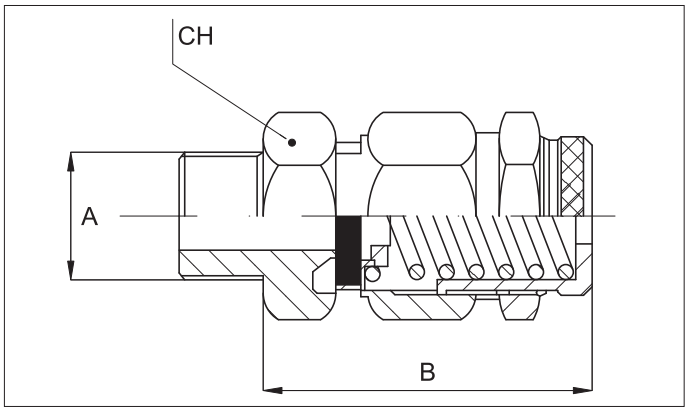

A	B	CH
1/8”	34	15
1/4”	34	15
3/8”	53	20
1/2”	53	22
3/4”	70	30
1”	70	30

Technical data				
Fluid	Compressed filtered air with or without lubrication. Lubrication, if be used, must be continous.			
Pressure range	3 ÷ 7 bar			
Temperature range	-10 °C ÷ + 90°C			
Orifice	1/8” - 1/4”= 6 mm	3/8”= 10 mm	1/2”= 11 mm	3/4” - 1”= 18 mm
Flow	1/8” - 1/4”= 1.600 l/min	3/8”= 3.400 l/min	1/2”= 3.700 l/min	1”= 7.900 l/min
Materials	Body, seat, adjustment screw, lock nut:		Brass	
	Spring:		Steel C 98	
	Seal:		Nitrile rubber (NBR)	

Esecuzioni			
Version	Symbol	Code	Item
Ø52 mm,12 springs, connection F03/F05 CH=11	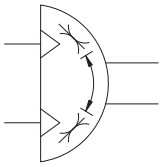	810103	AR52SEF03/0511
Ø63 mm,12 springs, connection F05/F07 CH=14		810107	AR63SEF05/0714
Ø75 mm,12 springs, connection F05/F07 CH=14		810109	AR75SEF05/0714
Ø83 mm,12 springs, connection F05/F07 CH=17		810111	AR83SEF05/0717
Ø92 mm,12 springs, connection F05/F07 CH=17		810113	AR92SEF05/0717
Ø105 mm,12 springs, connection F07/F10 CH=22		810115	AR105SEF07/1022
Ø125 mm,12 springs, connection F07/F10 CH=22		810117	AR125SEF07/1022

Series of rotary actuators single acting with double rack.
They can be applied to ball or butterfly valves to automate their operation.
The coupling actuator/valve can be direct thanks to the holes made on the bottom of the actuator itself according to ISO 5211 - DIN 3337 standards or through specific adapters.
The upper side of the actuator is made according to VDI/VDE 3845 NAMUR standards and allows to set up accessories such as CAM and position sensors.
The side connections are threaded and arranged for NAMUR valves.
For actuator with valve see from page 2.431.1.
For adapters and brackets see page 2.431.30.
For CAM and position sensors see page 2.431.30
For NAMUR solenoid valves see page 2.88.1.
How to order: AR52SEF0305/0511V

Options	Suffix
Seals FKM (max T= +150°C)	V
Silicone seals (max T= -40°C)	BT

AR52SEF03/0511	06
Version	Option

On request, they are supplied up to Ø 270 mm.

Technical data		
Fluid	Compressed filtered air with or without lubrication. Lubrication, if be used, must be continous.	
Pressure range	See forces table at page 2.430.3	
Temperature range	-20 °C ÷ + 80°C	
Materials	Body:	Hardened and anodised aluminium ASTM6063T6
	Piston and rack:	Aluminium
	Pinio:	Nickel plated steel
	Heads:	Aluminium
	Screws and springs:	Stainless steel
	Seals:	Nitrile rubber (NBR)

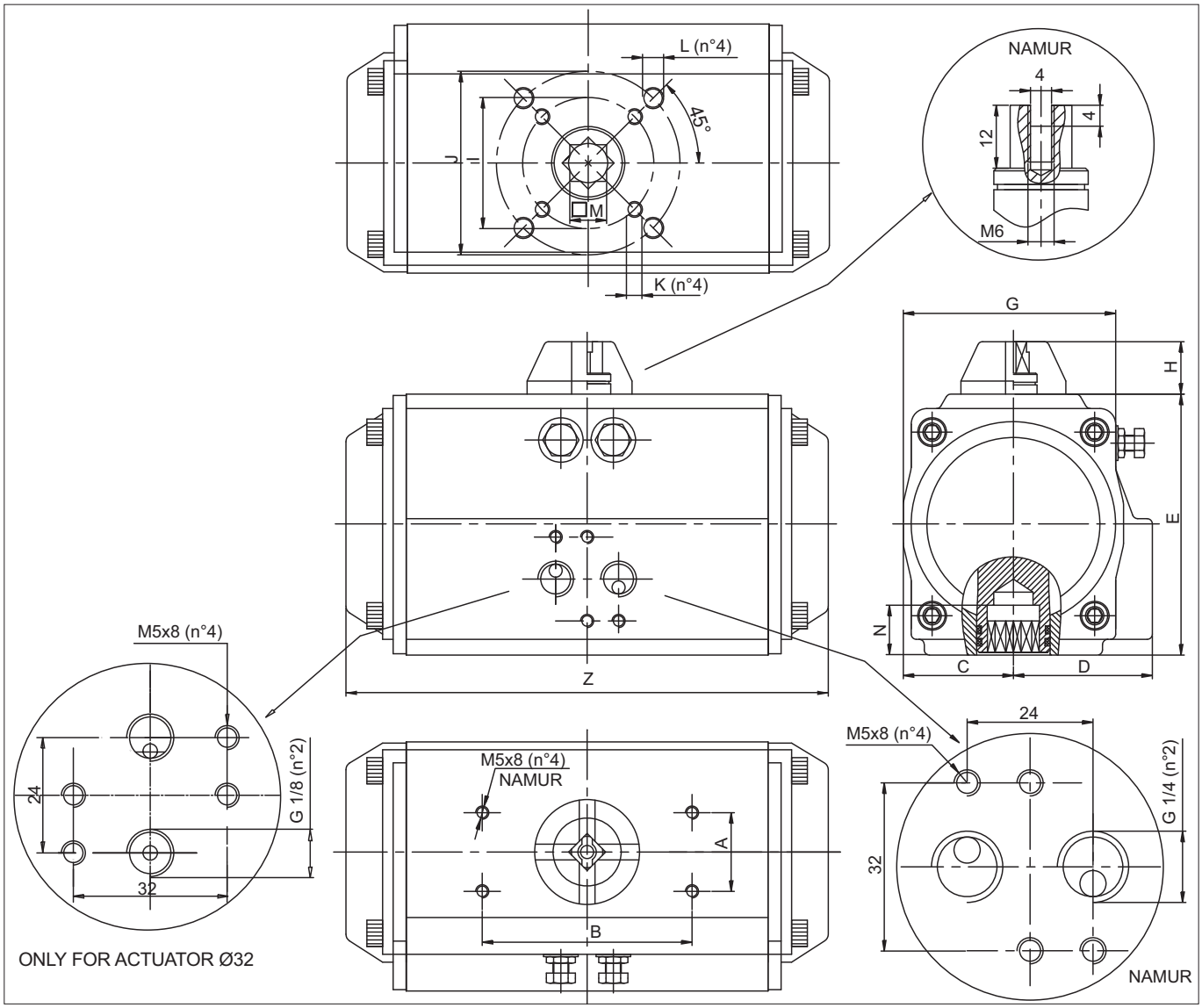

Actuator Ø	A	B	C	D	E	G	H	I	J	K	L	M	N	Z	Connection	ISO flange
52	30	80	30	41.5	72	65	20	36	50	M5x8	M6x10	11	14	147	G1/4 NAMUR	F03 / F05
63	30	80	36	47	87.5	72	20	50	70	M6x10	M8x13	14	18	168	G1/4 NAMUR	F05 / F07
75	30	80	42	53	99.5	81	20	50	70	M6x10	M8x13	14	18	184	G1/4 NAMUR	F05 / F07
83	30	80	46	57	108,8	92	20	50	70	M6x10	M8x13	17	21	204	G1/4 NAMUR	F05 / F07
92	30	80	50	61	116,5	98	20	50	70	M6x10	M8x13	17	21	262	G1/4 NAMUR	F05 / F07
105	30	80	57,5	64	133	109,5	20	70	102	M8x13	M10x16	22	26	268	G1/4 NAMUR	F07 / F10
125	30	80	67,5	74.5	155	127,5	20	70	102	M8x13	M10x16	22	26	301	G1/4 NAMUR	F07 / F10

OUTPUT TORQUE OF SPRING RETURN ACTUATORS (Nm)																	
Ø actuator	Air pressure (bar)																
	Molle	2.5		3		4		5		6		7		8		Springs' output	
		0°	90°	0°	90°	0°	90°	0°	90°	0°	90°	0°	90°	0°	90°	90°	0°
52	5	5,7	3,8	7,6	5,7											6,2	4,3
	6	4,9	2,5	6,9	4,5	10,9	8,5									7,4	5,0
	7	4,0	1,3	6,0	3,3	9,8	7,3	14,0	10,4							8,6	5,9
	8			5,2	2,0	9,2	6,0	13,2	9,1	17,2	14,1					9,9	6,7
	9			4,3	0,8	8,3	4,8	12,3	7,9	16,3	12,8	20,3	16,8			11,1	7,6
	10					7,4	3,6	11,5	6,7	15,5	11,6	19,5	15,6			12,4	8,5
	11					6,6	2,3	10,6	5,4	14,6	10,4	18,6	14,3	22,6	18,3	13,6	9,3
	12							9,7	4,2	13,8	9,1	17,8	12,2	21,8	17,1	14,8	10,2
63	5	11,4	7,7	15,0	11,4	22,3	14,9									10,4	6,8
	6	10,1	5,7	13,6	9,3	20,9	16,6	29,3	23,9							12,5	8,2
	7	8,6	3,6	12,5	7,2	19,5	14,5	26,8	21,9							14,6	9,6
	8			10,9	5,1	18,2	12,4	25,5	19,8	32,8	27,0	40,1	34,3			16,7	12,3
	9					16,8	10,4	24,1	17,7	31,4	24,9	38,7	32,2			18,8	12,3
	10					1,4	8,2	22,8	15,6	30,0	22,8	37,3	30,1	44,7	37,4	20,9	13,7
	11							21,5	13,5	28,7	20,7	36,0	28,0	43,3	35,3	22,9	15,0
	12							20,0	11,4	27,3	18,6	34,6	25,9	41,9	33,3	25,0	16,4
75	5	14,5	10,6	19,4	15,5	29,5	25,7									14,5	10,5
	6	12,4	7,6	17,3	12,6	27,4	22,7	37,5	32,8							17,4	12,7
	7	10,4	4,8	15,2	9,7	25,3	19,9	35,4	29,9							20,3	14,8
	8			13,1	6,8	23,1	16,9	33,3	27,0	43,2	37,0	53,3	47,0			23,2	16,9
	9					19,0	14,1	31,2	24,1	41,1	34,1	51,2	44,2			26,1	19,0
	10						11,1	28,8	21,2	39,0	31,2	49,1	41,2	59,1	51,2	29,0	21,1
	11							27,0	18,3	37,0	28,3	47,0	38,4	57,0	48,4	31,9	23,2
	12							24,9	15,4	34,9	25,4	44,9	35,4	54,9	45,4	34,7	25,3
83	5	23,3	16,1	31,1	24,0	46,8	37,7									23,0	15,8
	6	20,1	11,5	28,0	19,3	43,7	35,1	59,4	50,7							27,6	19,0
	7	17,0	6,9	24,8	14,8	40,5	30,5	56,2	46,2							32,2	22,1
	8			21,7	10,1	37,4	25,8	53,1	41,5	68,8	57,2	84,5	72,9			36,8	25,3
	9					34,2	21,3	49,9	37,0	65,6	52,6	81,2	68,3			41,4	28,5
	10					31,0	16,6	46,7	32,3	62,4	48,0	78,1	63,7	93,8	79,3	46,0	31,6
	11							43,6	27,7	59,3	43,4	75,0	59,1	90,6	74,8	50,6	34,8
	12							40,4	23,2	56,1	38,9	71,7	54,5	87,4	70,2	55,2	38,0
92	5	33,1	22,0	44,2	33,2	66,8	55,8									34,4	23,3
	6	28,4	15,2	39,6	26,4	62,2	49,0	84,8	71,6							41,2	28,0
	7	23,8	8,2	34,9	19,4	57,5	42,1	80,2	64,7							48,1	32,7
	8			31,3	12,6	52,9	35,2	75,5	57,9	98,1	80,5	120,7	103,0			55,0	37,3
	9					48,2	28,4	70,9	51,0	93,5	73,6	116,0	96,1			61,9	42,0
	10					43,6	21,5	66,2	44,1	88,8	66,7	111,3	89,2	134,0	111,8	68,7	46,7
	11							61,5	37,2	84,1	59,9	106,6	82,4	129,2	105,0	75,6	81,4
	12							56,8	30,4	79,4	53,0	101,9	75,5	124,5	98,1	82,5	56,0
105	5	51,0	33,4	67,5	49,9	100,6	83,0									49,2	31,6
	6	44,7	23,5	61,1	40,0	94,2	73,2	127,3	106,2							59,1	38,0
	7	38,4	13,7	54,9	30,3	87,9	63,4	121,0	96,4							68,9	44,3
	8			48,5	20,4	81,6	53,5	114,7	86,5	147,7	119,6	180,8	152,7			78,7	50,6
	9					75,3	43,7	108,4	76,8	141,5	109,8	174,5	142,9			88,6	56,9
	10					68,9	33,4	102,0	66,5	135,1	99,6	168,2	132,9	201,2	165,7	98,4	63,3
	11							95,7	57,0	128,7	90,1	161,8	123,1	194,8	156,2	108,3	69,6
	12							89,4	47,5	122,5	80,6	155,5	113,6	188,6	146,7	118,1	75,9
125	5	73	47	98	72	148	122									79	52
	6	63	31	88	56	138	107	188	157							94	63
	7	52	15	77	50	127	90	178	141							110	73
	8			67	25	117	75	167	125	217	176	268	226			125	84
	9					107	59	157	109	207	159	257	210			141	90
	10					96	44	146	94	196	144	247	194	297	245	157	105
	11							136	78	186	128	236	178	286	228	173	115
	12							125	63	176	113	226	163	276	213	188	125

Executions			
Version	Symbol	Code	Item
ø 32 mm connection F03 CH=9	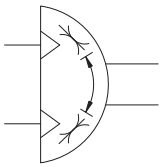	810101	AR32DEF0309
ø 52 mm 2 connection F03/F05 CH=11		810103	AR52DEF03/0511
ø 63 mm connection F05/F07 CH=14		810106	AR63DEF05/0714
ø 75 mm connection F05/F07 CH=14		810108	AR75DEF05/0714
ø 83 mm connection F05/F07 CH=17		810110	AR83DEF05/0717
ø 92 mm connection F05/F07 CH=17		810112	AR92DEF05/0717
ø 105 mm connection F07/F10 CH=22		810114	AR105DEF07/1022
ø 125 mm connection F07/F10 CH=22		810116	AR125DEF07/1022

Series of rotary actuators double acting with double rack.
They can be applied to ball or butterfly valves to automate their operation.
The coupling actuator/valve can be direct thanks to the holes made on the bottom of the actuator itself according to ISO 5211 - DIN 3337 standards or through specific adapters.
The upper side of the actuator is made according to VDI/VDE 3845 NAMUR standards and allows to set up accessories such as CAM and position sensors.
The side connections are threaded and arranged for NAMUR valves.
For actuator with valve see from page 2.431.1.
For adapters and brackets see page 2.431.30.
For CAM and position sensors see page 2.431.30
For NAMUR solenoid valves see page 2.88.1.

How to order: AR52DEF03/0511V

Options	Suffix
Seals FKM (max T= +150°C)	V
Silicone seals (max T= -40°C)	BT

AR52DEF03/0511	V
Version	Option

On request, they are supplied up to Ø 270 mm.

Technical data		
Fluid	Compressed filtered air with or without lubrication. Lubrication, if be used, must be continous.	
Pressure range	See forces table at page 2.430.11	
Temperature range	-20 °C ÷ + 80°C	
Materials	Body:	Hardened and anodised aluminium ASTM6063T6
	Piston and rack:	Aluminium
	Pinio:	Nickel plated steel
	Heads:	Aluminium
	Screws and springs:	Stainless steel
	Seals:	Nitrile rubber (NBR)

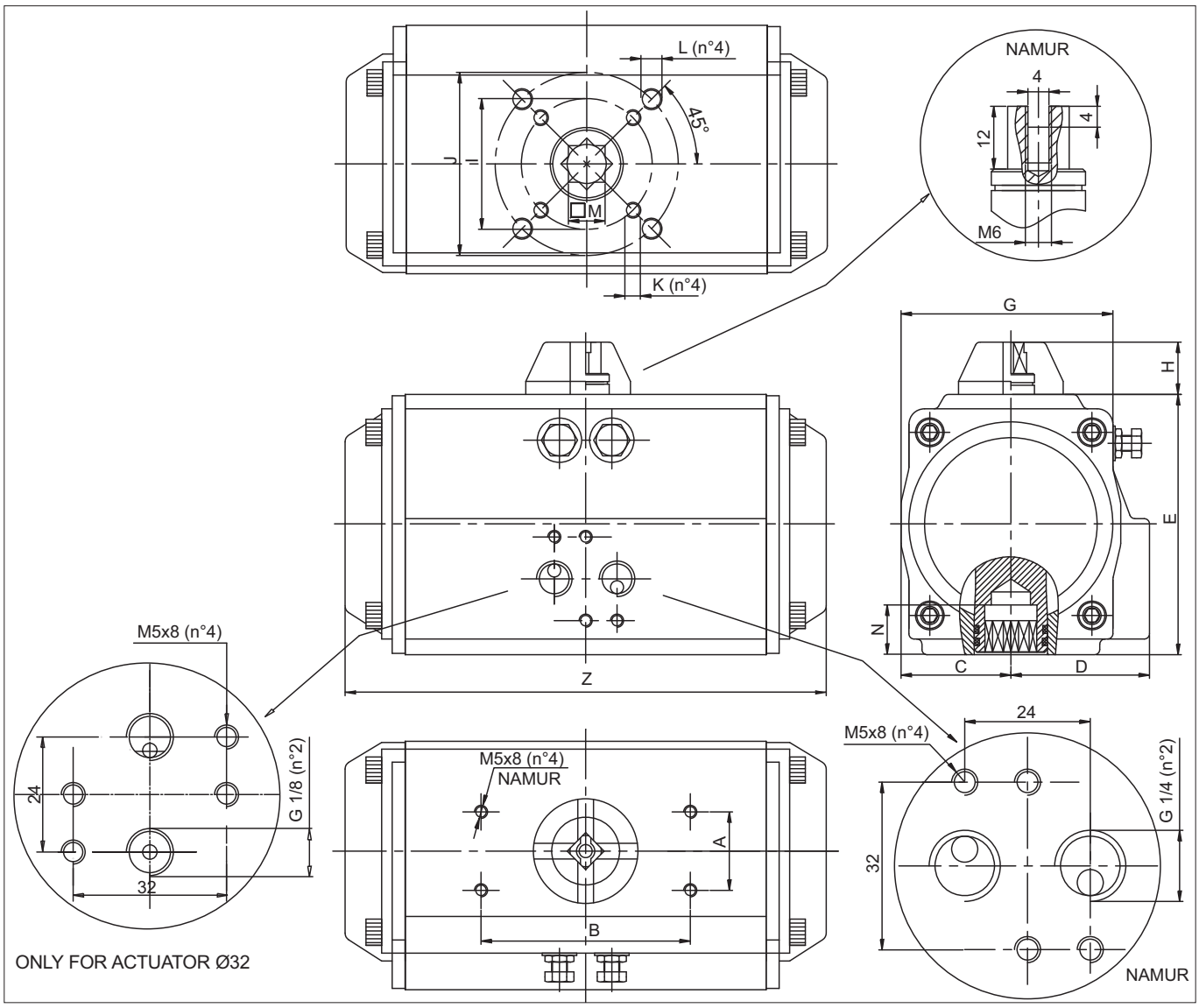

Ø actuator	A	B	C	D	E	G	H	I	J	K	L	M	N	Z	Connection	ISO flange
32	30	80	22,5	22.5	45	45	20	36	-	M5x8	-	9	-	118	G1/8	F03
40	30	80	28,5	36.5	60	65	20	36	50	M5x8	M6x10	11	14	147	G1/4 NAMUR	F03 / F05
52	30	80	30	41.5	72	65	20	36	50	M5x8	M6x10	11	14	147	G1/4 NAMUR	F03 / F05
63	30	80	36	47	87.5	72	20	50	70	M6x10	M8x13	14	18	168	G1/4 NAMUR	F05 / F07
75	30	80	42	53	99.5	81	20	50	70	M6x10	M8x13	14	18	184	G1/4 NAMUR	F05 / F07
83	30	80	46	57	108,8	92	20	50	70	M6x10	M8x13	17	21	204	G1/4 NAMUR	F05 / F07
92	30	80	50	61	116,5	98	20	50	70	M6x10	M8x13	17	21	262	G1/4 NAMUR	F05 / F07
105	30	80	57,5	64	133	109,5	20	70	102	M8x13	M10x16	22	26	268	G1/4 NAMUR	F07 / F10
125	30	80	67,5	74.5	155	127,5	20	70	102	M8x13	M10x16	22	26	301	G1/4 NAMUR	F07 / F10

OUTPUT TORQUE OF SPRING RETURN ACTUATORS (Nm)

Ø actuator	Air pressure (bar)									
	2	2,5	3	4	4,5	5	5,5	6	7	8
32	3,1	3,8	4,6	6,1	6,9	7,6	8,4	9,2	10,7	12,2
40	4,8	6,0	7,2	9,5	10,7	11,9	13,1	14,3	16,7	19,1
52	8,0	10,0	12,0	16,0	18,0	20,0	21,9	23,9	27,9	31,9
63	14,6	18,2	21,9	29,2	32,8	36,5	40,1	43,8	51,1	58,4
75	20,1	25,1	30,1	40,1	45,1	50,2	55,2	60,2	70,2	80,3
83	31,4	39,2	47,0	62,7	70,5	78,4	86,2	94,1	109,7	125,4
92	45,1	56,4	67,7	90,3	101,6	112,9	124,1	135,4	158,0	180,6
105	66,1	82,7	99,2	132,2	148,8	165,3	181,8	198,4	231,4	264,5
125	100,3	125,4	150,5	200,6	225,7	250,8	275,9	301,0	351,1	401,3

Rotary actuators with ball valve

Brass ball valves with actuator single acting

Executions			
Version	Symbol	Code	Item
1/2”	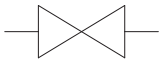	811011	VSO2012SE
3/4”		811012	VSO2034SE
1”		811013	VSO2100SE
1 1/4”		811014	VSO2114SE
1 1/2”		811015	VSO2112SE
2”		811016	VSO2200SE

Series of brass ball valves “full bore” with rotary actuator single acting.
For actuator features see page 2.430.1.
For NAMUR solenoid valve see page 2.88.1.
For actuator mounting accessories see page 2.431.30.

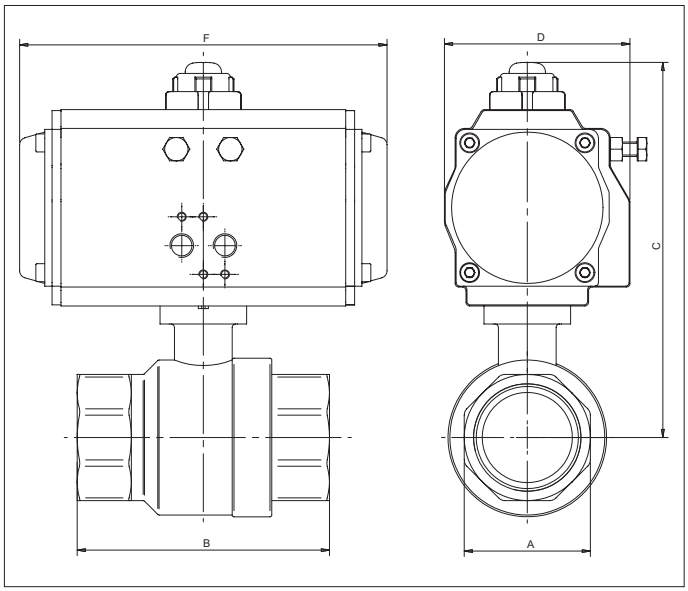

Size	A	B	Ø actuator	C	D	F
G1/2	26	75	52	130	71,5	147
G3/4	32	80	52	132,5	71,5	147
G1	41	90	52	136	71,5	147
G1 1/4	50	110	63	162,5	83	168
G1 1/2	55	120	63	169	83	168
G2	70	140	83	201,8	103	204

Technical data of the ball valve						
Fluid	Compressed air, water, inert gases and non-aggressive fluids					
Pressure range	40 bar					
Temperature range	-20 °C ÷ + 130°C					
Orifice	1/2”= 15 mm	3/4”= 20 mm	1”= 25 mm	1 1/4”= 32 mm	1 1/2”= 40 mm	2”= 50 mm
Flow	1/2”= 11.500 l/min	3/4”= 21.000 l/min	1”= 33.000 l/min	1 1/4”= 50.000 l/min	1 1/2”= 84.000l/min	2”= 97.000 l/min
Mounting	In-line					
Materials	Body:	Nickel plated brass				
	Ball:	Chrome plated brass				
	Seals:	PTFE - NBR				

Rotary actuators with ball valve

Brass ball valves with actuator double acting

Executions			
Version	Symbol	Code	Item
1/2”	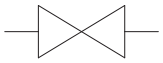	811001	VSO2012DE
3/4”		811002	VSO2034DE
1”		811003	VSO2100DE
1 1/4”		811004	VSO2114DE
1 1/2”		811005	VSO2112DE
2”		811006	VSO2200DE

Series of brass ball valves “full bore” with rotary actuator double acting.
For actuator features see page 2.430.10.
For NAMUR solenoid valve see page 2.88,1.
For actuator mounting accessories see page 2.431.30.

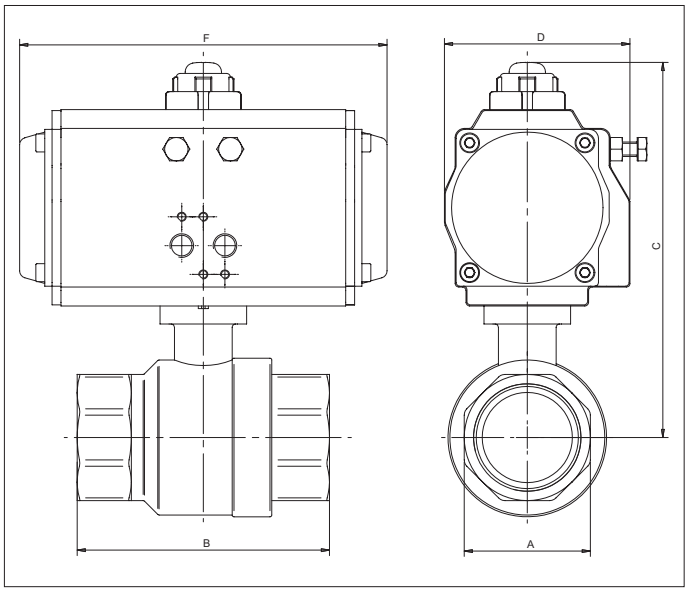

Size	A	B	Ø actuator	C	D	F
G1/2	26	75	32	103	45	118
G3/4	32	80	32	105,5	45	118
G1	41	90	40	124	65	120
G1 1/4	50	110	40	135	65	120
G1 1/2	55	120	52	153,5	71,5	147
G2	70	140	63	180,5	83	168

Technical data of the ball valve						
Fluid	Compressed air, water, inert gases and non-aggressive fluids					
Pressure range	40 bar					
Temperature range	-20 °C ÷ + 130°C					
Orifice	1/2”= 15 mm	3/4”= 20 mm	1”= 25 mm	1 1/4”= 32 mm	1 1/2”= 40 mm	2”= 50 mm
Flow	1/2”= 11.500 l/min	3/4”= 21.000 l/min	1”= 33.000 l/min	1 1/4”= 50.000 l/min	1 1/2”= 84.000l/min	2”= 97.000 l/min
Mounting	In-line					
Materials	Body: Nickel plated brass Ball: Chrome plated brass Seals: PTFE - NBR					

Rotary actuators with ball valve

Stainless steel ball valves with actuator single acting

Executions			
Version	Symbol	Code	Item
3/8”	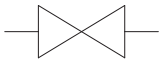	811031	VSI2038SE
1/2”		811032	VSI2012SE
3/4”		811033	VSI2034SE
1”		811034	VSI2100SE
1 1/4”		811035	VSI2114SE
1 1/2”		811036	VSI2112SE
2”		811037	VSI2200SE

Series of stainless steel ball valves “full bore” with rotary actuator single acting.
For actuator features see page 2.430.1.
For NAMUR solenoid valve see page 2.88.1.
For actuator mounting accessories see page 2.431.30.

Size	A	B	Ø actuator	C	D	F
G3/8	27	65	52	132	71,5	147
G1/2	27	75	52	132	71,5	147
G3/4	33	80	52	136	71,5	147
G1	41	90	63	159,5	83	168
G1 1/4	50	110	63	165,5	83	168
G1 1/2	58	120	83	196,8	103	204
G2	70	140	83	205,8	103	204

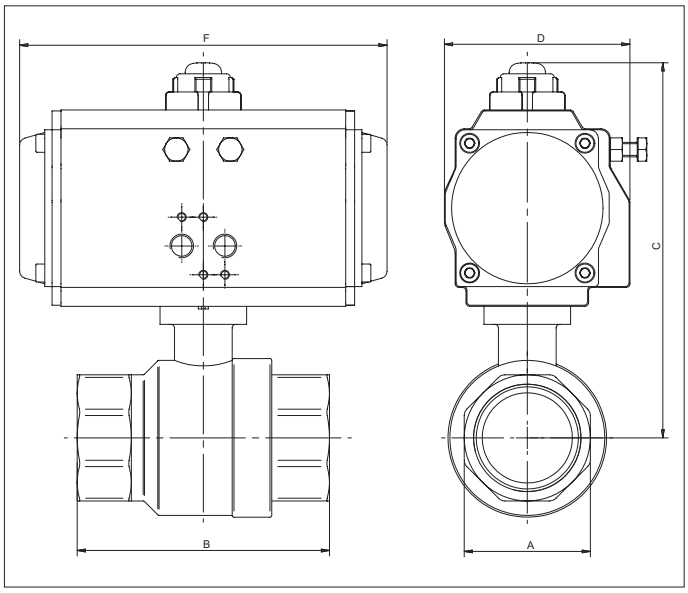

Technical data of the ball valve							
Fluid	Compressed air, water, inert gases, fluids, steam						
Pressure range	63 bar						
Temperature range	-20 °C ÷ + 150°C						
Orifice	3/8”= 10 mm	1/2”= 15 mm	3/4”= 20 mm	1”= 25 mm	1 1/4”= 32 mm	1 1/2”= 40 mm	2”= 50 mm
Flow	3/8”= 3.000 l/min	1/2”= 11.500 l/min	3/4”= 21.000 l/min	1”= 33.000 l/min			
	1 1/4”= 50.000 l/min	1 1/2”= 84.000 l/min	2”= 97.000 l/min.				
Mounting	In-line						
Materials	Body:	Stainless steel AISI 316					
	Ball:	Stainless steel AISI 316					
	Seals:	PTFE - FKM					

Rotary actuators with ball valve

Stainless steel ball valves with actuator double acting

Executions			
Version	Symbol	Code	Item
3/8”	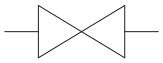	811021	VSI2038DE
1/2”		811022	VSI2012DE
3/4”		811023	VSI2034DE
1”		811024	VSI2100DE
1 1/4”		811025	VSI2114DE
1 1/2”		811026	VSI2112DE
2”		811027	VSI2200DE

Series of stainless steel ball valves “full bore” with rotary actuator double acting.
For actuator features see page 2.430.10.
For NAMUR solenoid valve see page 2.88.1.
For actuator mounting accessories see page 2.431.30.

Size	A	B	Ø actuator	C	D	F
G3/8	27	65	32	105	45	118
G1/2	27	75	32	105	45	118
G3/4	33	80	32	109	45	118
G1	41	90	40	132	65	120
G1 1/4	50	110	52	150	71,5	147
G1 1/2	58	120	63	175,5	83	168
G2	70	140	75	196,5	95	184

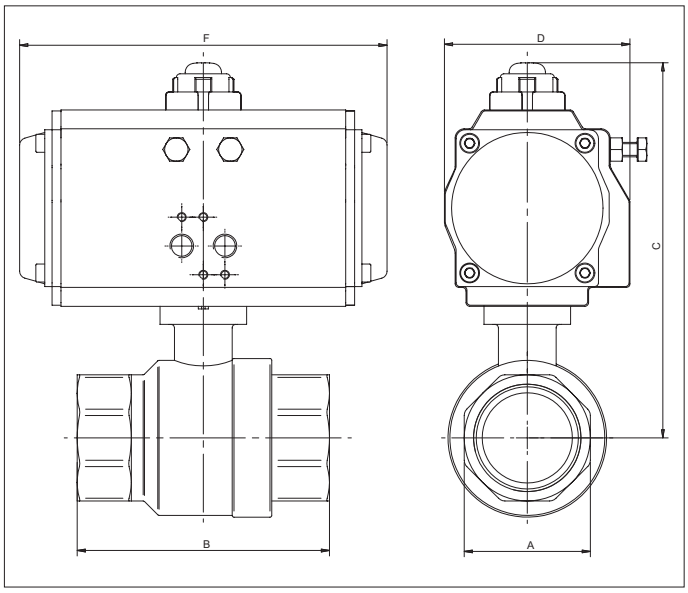

Technical data of the ball valve							
Fluid	Compressed air, water, inert gases, fluids, steam						
Pressure range	63 bar						
Temperature range	-20 °C ÷ + 150°C						
Orifice	3/8”= 10 mm	1/2”= 15 mm	3/4”= 20 mm	1”= 25 mm	1 1/4”= 32 mm	1 1/2”= 40 mm	2”= 50 mm
Flow	3/8”= 3.000 l/min	1/2”= 11.500 l/min	3/4”= 21.000 l/min	1”= 33.000 l/min			
	1 1/4”= 50.000 l/min	1 1/2”= 84.000 l/min	2”= 97.000 l/min.				
Mounting	In-line						
Materials	Body:	Stainless steel AISI 316					
	Ball:	Stainless steel AISI 316					
	Seals:	PTFE - FKM					

Rotary actuators with ball valve

Limit switch box

Executions			
Version	Sensor	Code	Item
SB200	ZM50G10B01	811188	SB200M012
	ZM10G10B01	811189	SB200M022
	NBB2-V3-E2	811190	SB200P112
	IS5076	811191	SB200P122
	NCB2-V3-NO	811192	SB200P132
	ALMS-5-240	811193	SB200Q512
SB500	83261	811194	SB500M032
	83268	811195	SB500M042
	NBBB2-V3-E2	811196	SB500P112
	IS 5076	811197	SB500P122
	NCB2-V3-NO	811198	SB500P132
	ALMS-5-240	811199	SB500Q512

Aluminum switch boxes painted with epox powder black, supplied complete with universal adjustable brackets for assembly on our full range of actuators (L=30x80/130-H=20/30).
This device is particularly suitable for monitoring the position of each valve, even at long distances, it can contain mechanical or proximity limit switches.
Tridimensional position indicator yellow/red and 8 wire points standard (two free for eventual electrovalve attachment in box). There is plenty of room to facilitate all wiring procedures, on installation.
Screws on the box cover are self-locking and unlosable, cam easy to set without tools, don't need any further adjustment after initial setting.

Technical data of limit switch box		
Class protection	IP67 (SB200) - IP66 (SB500)	
Cable entry	M20x1.5 (x2)	
Terminal strip	8 wire points	
Position indicator	0° ÷ 90°	
Open / Closed	Yellow / Red	
Materials	Cover:	Aluminium alloy
	Body:	Aluminium alloy
	Shaft:	Stainless steel
	Indicator cover:	Polycarbonate
	Indicator:	ABS, polycarbonate
	Terminal strip:	Polycarbonate, brass, stainless steel
	Cam:	Polycarbonate
	Spring:	Stainless steel
	Screws:	Stainless steel
	O-ring;	NBR
	Earthing screw:	Stainless steel

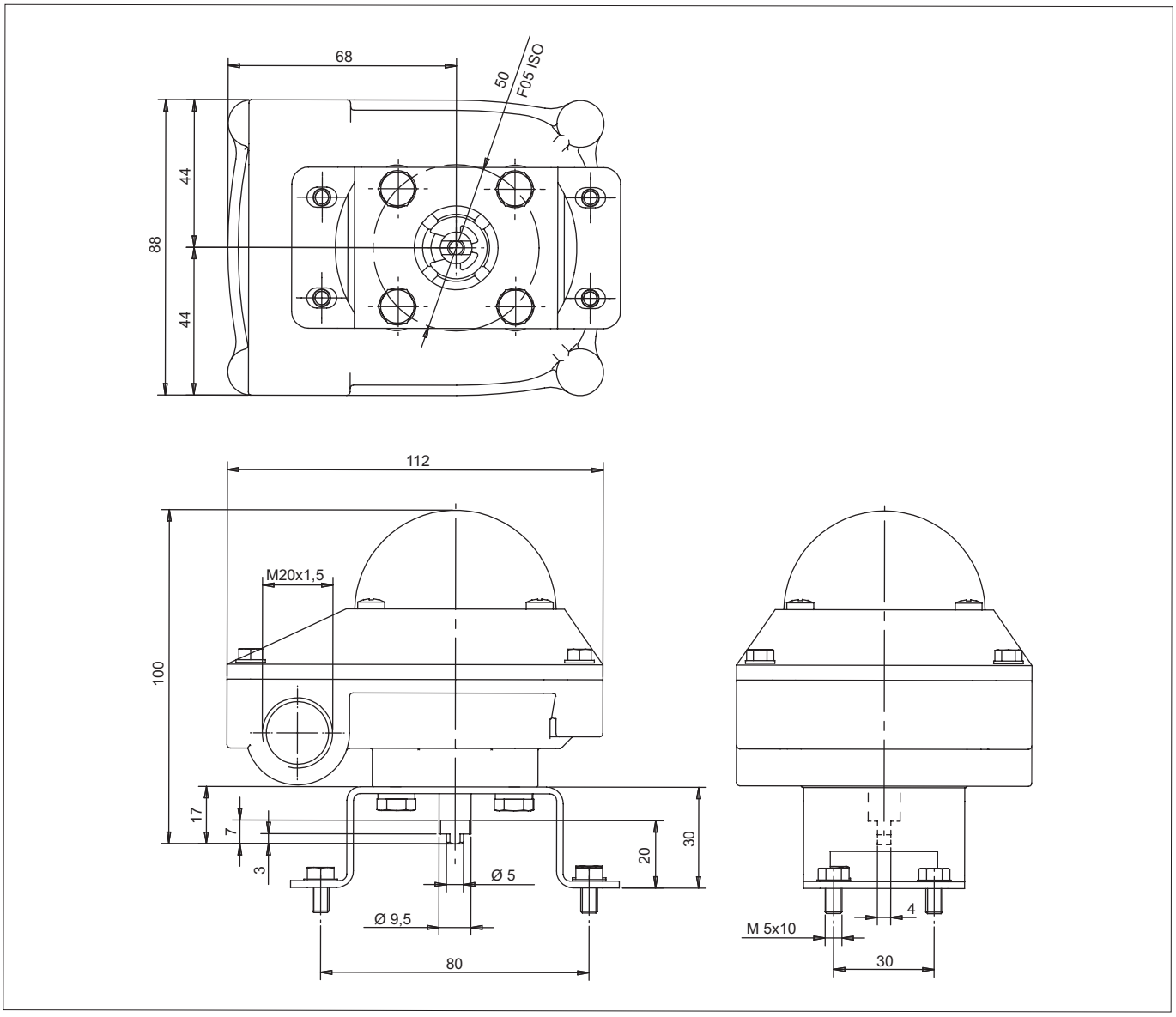

	Mechanical		Proximity			Magnetic
Limit switch manufacturer	Honeywell		Pepprl Fuchs	IFM	Pepperl Fuchs	ALMS
Limit switch code	ZM10G10B01	ZM10G10B01	NBB2-V3-E2	IS5076	NCB2-V3-NO	ALMS-5-240
Ex identication	-		EEx ia IICT6	-	EEx ia IICT6	-
Contacts	Silver	Gold	-			-
Function	SPDT		PNP	PNP / NPN	NAMUR NC	-
Number of wires	3		3	2	2	3
Voltage	125 ÷ 250 VAC	0 ÷ 125 VAC	10 ÷ 30 VDC	5 ÷ 36 VDC	8 VDC	5 ÷ 240 V AC/DC
Intensity	5 A	0,1 A	0 ÷ 100 mA	0 ÷ 200 mA	-	≤ 300 mA
Switching frequency	-		0 ÷ 1000 Hz	0 ÷ 2000 Hz	0 ÷ 2000 Hz	60 Hz
Temperature	-20 ÷ +80 °C		-25 ÷ +70 °C	-25 ÷ +80 °C	-25 ÷ +100 °C	-20 ÷ +75 °C
N° wiring diagram	1		2	2/3	4	5
Limit switch code	01	02	11	12	13	51
Q.ty of limit switch	2	2	2	2	2	2
Code	811188	811189	811190	811191	811192	811193
Item	SB200M32	SB200M42	SB200P112	SB200122	SB200P132	SB200Q512

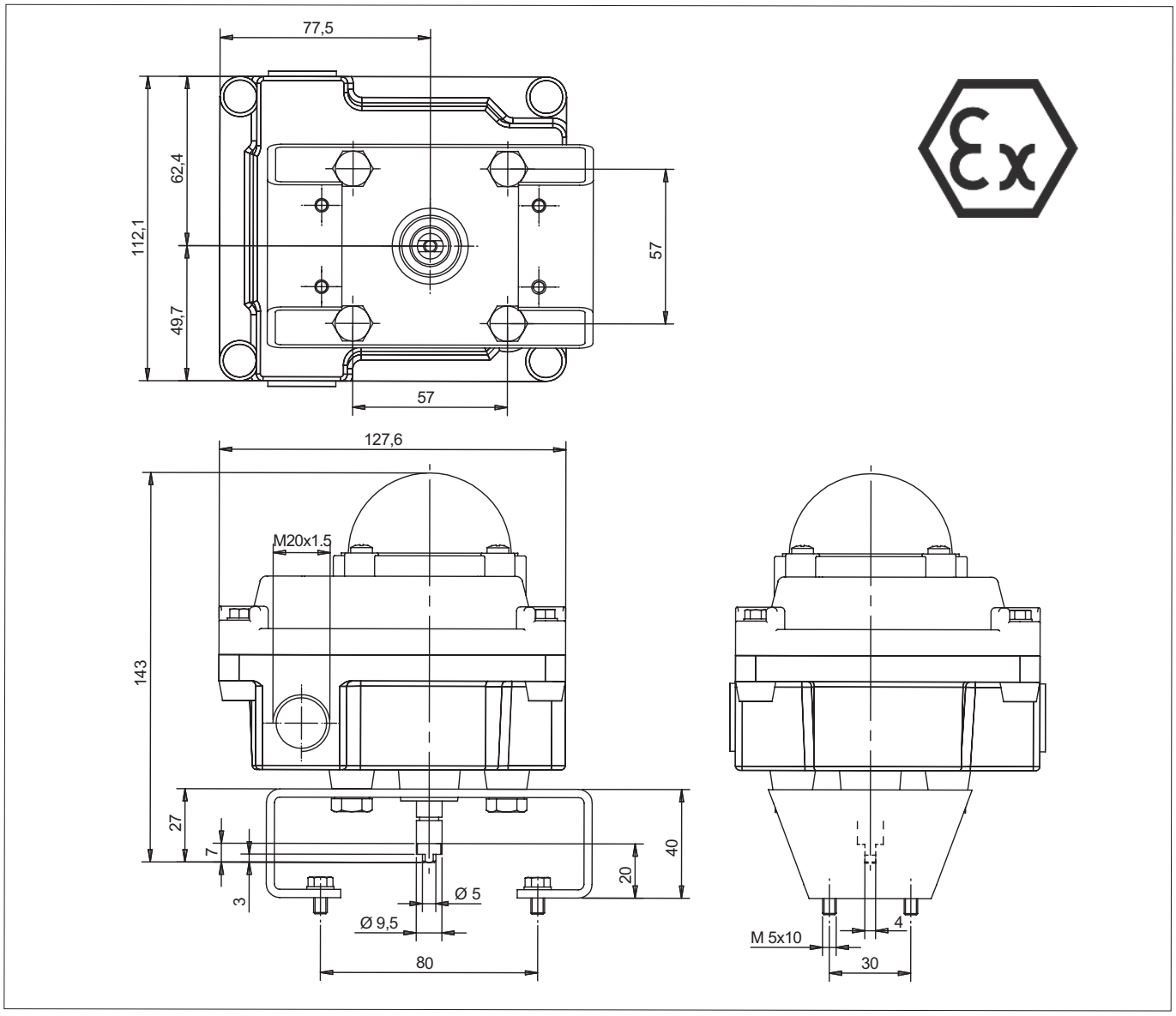

	Mechanical		Proximity			Magnetic
Limit switch manufacturer	Crouzet		Pepprl Fuchs	IFM	Pepperl Fuchs	ALMS
Limit switch code	03261	83268	NBB2-V3-E2	IS5076	NCB2-V3-NO	ALMS-5-240
Ex identication	-		EEx ia IICT6	-	EEx ia IICT6	-
Contacts	Silver	Gold	-			-
Function	SPDT		PNP	PNP / NPN	NAMUR NC	-
Number of wires	3		3	2	2	3
Voltage	125 ÷ 250 VAC	30 VAC / 125 VAC	10 ÷ 30 VDC	5 ÷ 36 VDC	8 VDC	5 ÷ 240 V AC/DC
Intensity	16 A	0,1 A	0 ÷ 100 mA	0 ÷ 200 mA	-	≤ 300 mA
Switching frequency	-		0 ÷ 1000 Hz	0 ÷ 2000 Hz	0 ÷ 2000 Hz	60 Hz
Temperature	-20 ÷ +85 °C		-25 ÷ +70 °C	-25 ÷ +80 °C	-25 ÷ +100 °C	-20 ÷ +75 °C
N° wiring diagram	1		2	2/3	4	5
Limit switch code	03	04	11	12	13	51
Q.ty of limit switch	2	2	2	2	2	2
Code	811194	811195	811196	811197	811198	811199
Item	SB500M32	SB500M42	SB500P112	SB500122	SB500P132	SB500Q512

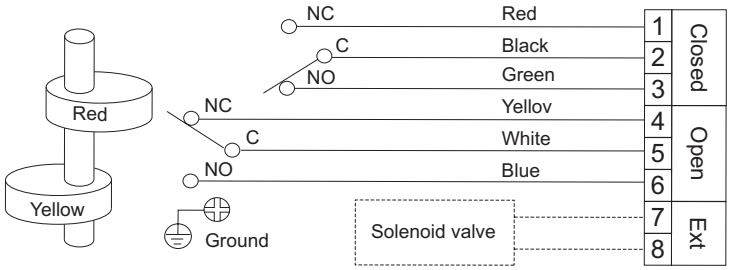

N° wiring diagram: 1

Function: SPDT

Type: Mechanical

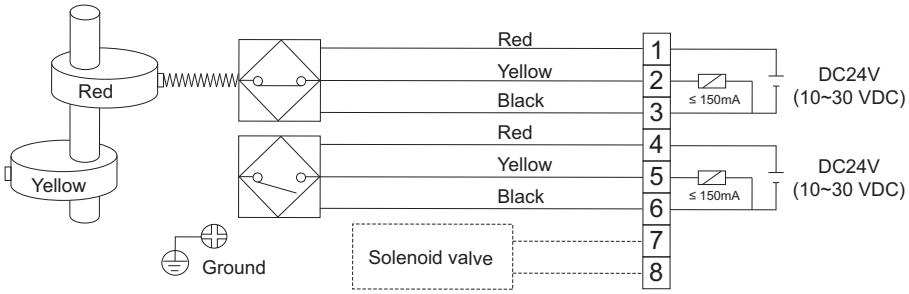

N° wiring diagram: 2

Function: PNP

Type: Proximity

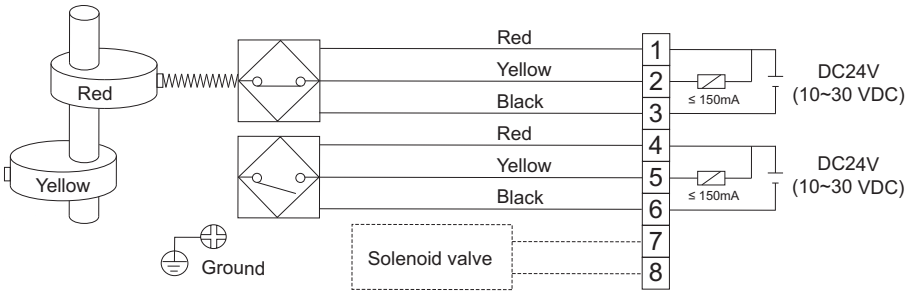

N° wiring diagram: 3

Function: NPN

Type: Proximity

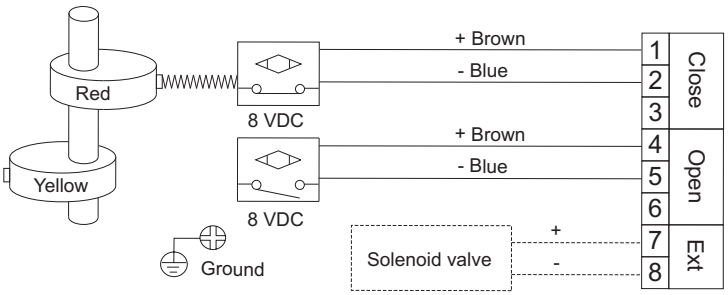

N° wiring diagram: 4

Function: NAMUR CN

Type: Proximity

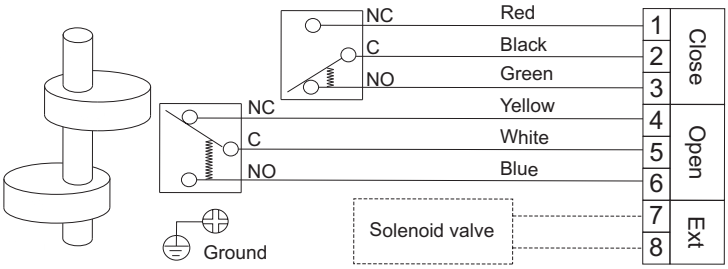

N° wiring diagram: 5

Function: SPDT

Type: Magnetic

2

Rotary actuators with ball valve

Handweel manipulator

Executions		
Version	Code	Item
Ø 50	811168	GDB050
Ø 70	811169	GDB070
Ø 102	811170	GDB102
Ø 140	811171	GDB140

Series of new generation handweel manipulators, compact and universal, with IP67 protection.
The design of these manipulators allow to chose on positioning between valve and actuator, function of manipulator can be reversed.

Manipulator is placed between valve and actuator: valve pin can be directly mounted to the actuator pinion through the manipulator body, or by an adaptor (in case a bracket should be applied).
During automatic working, handweel is off; connecting the manual function, the handweel will move both the ball-valve and the actuator.

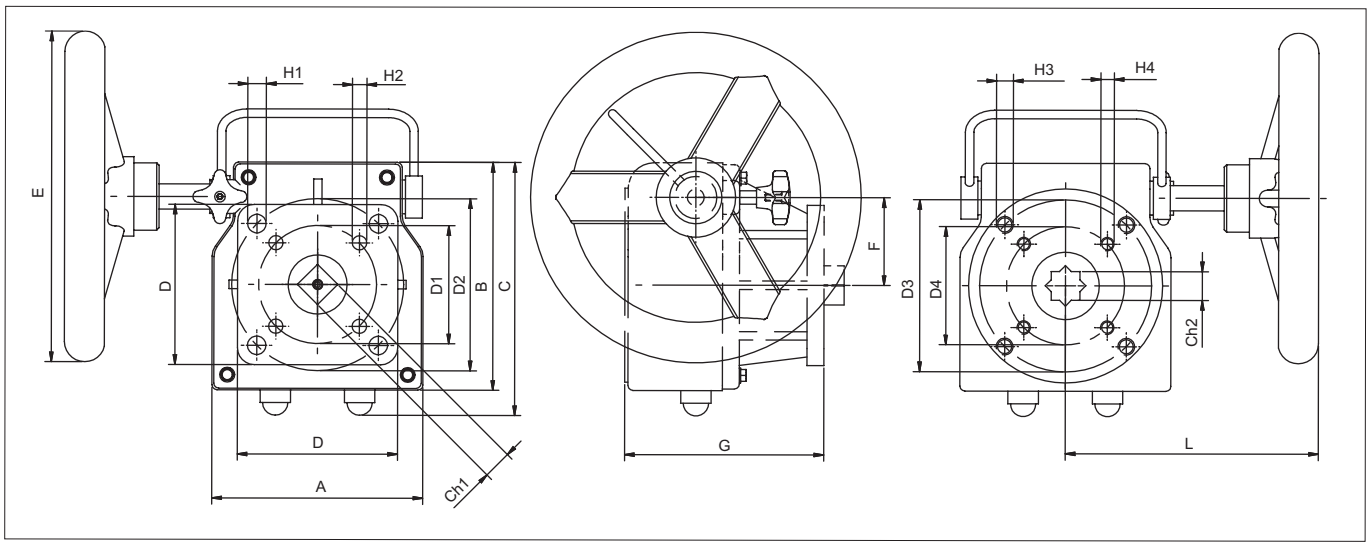

Item	A	B	C	E	F	G	L	D1	H1	D2	H2	D3	H3	D4	H4	Ch1	Ch2
GDB050	90	110	125	Ø 200	44	100	130	Ø 50	Ø 6,5	Ø 70	Ø 8,5	Ø 50	M6	Ø 70	M8	14	17
GDB070	125	135	150	Ø 200	52	118	150	Ø 70	Ø 8,5	Ø 102	Ø 11	Ø 70	M8	Ø 102	M10	17	17
GDB102	140	185	185	Ø 300	65	124	180	Ø 102	Ø 11	Ø 125	Ø 13	Ø 102	M10	Ø 125	M12	17	27
GDB140	190	230	230	Ø 400	85	162	200	-	-	Ø 140	Ø 17	-	-	Ø 140	M16	27	36

Item	Gear ratio	Output torque
GDB050	1 : 40	300 Nm
GDB070	1 : 38	360 Nm
GDB102	1 : 36	810 Nm
GDB140	1 : 50	1310 Nm

Caratteristiche tecniche dei riduttori disinseribili		
Materials	Handle:	Carbon steel
	Worm shaft:	C45
	Hand wheel:	Grey cast iron
	Positioning screw:	Carbon steel
	Worm gear:	Grafite in ghisa sferoidale
	Bracket cap:	Grey cast iron
	Body:	Grey cast iron