DIAGRAM OF A22/60MC-A1

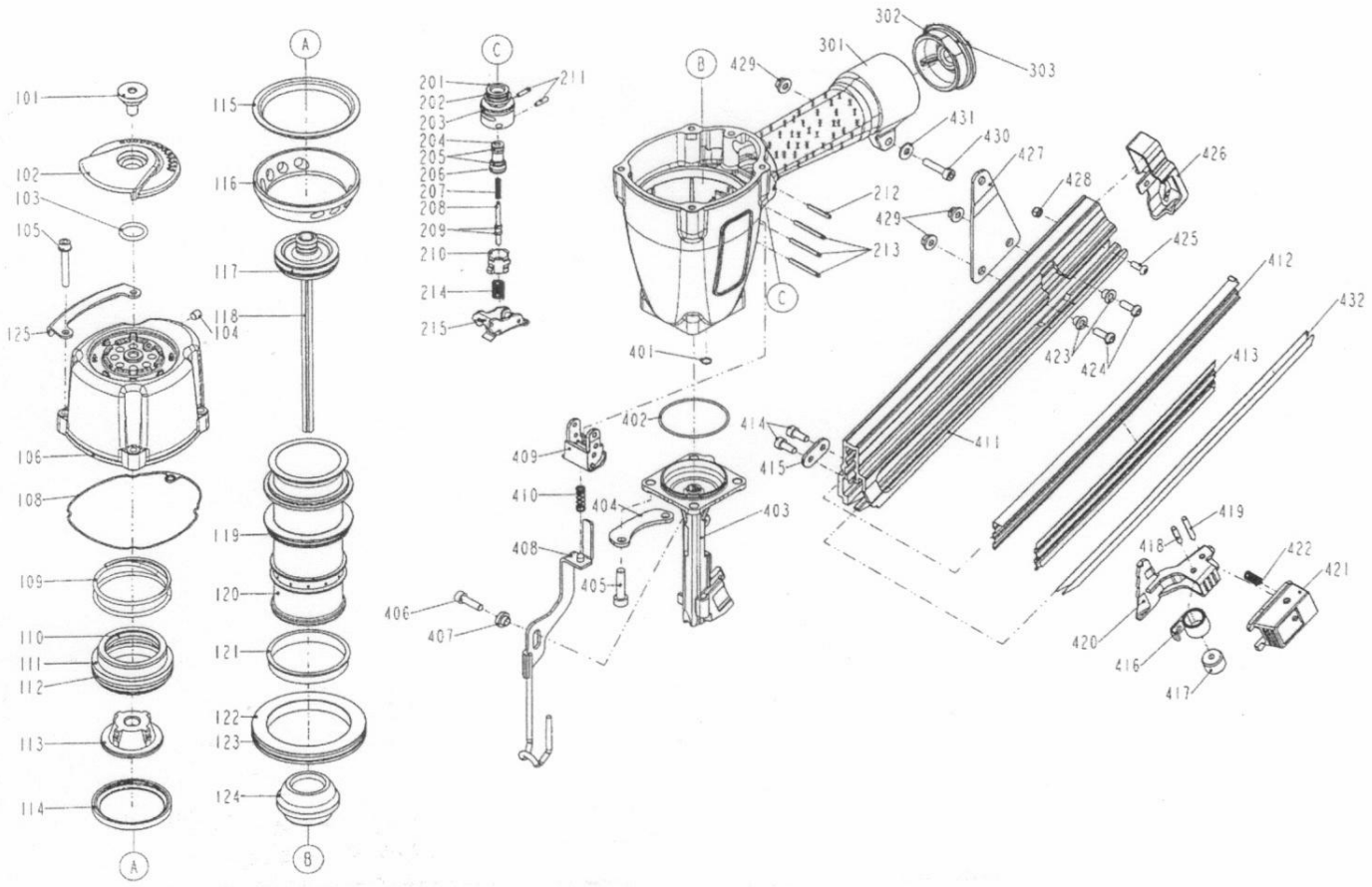

ITEM NO.	PART NO.	DESCRIPTION	ITEM NO.	PART NO.	DESCRIPTION	ITEM NO.	PART NO.	DESCRIPTION
101	1136B-0374702-1	DEFLECTOR PAD	210	11373-0780001-1	TRIGGER VALVE HEAD	425	2040102-02020-0	HALF ROUND HD.HEX.BOLT
102	11371-0374704-1	DEFLECTOR	211	2040400-05060-0	SPRING PIN	426	11390-1264701-1	PROTECTING HOOD COVER
103	2041106-02010-0	O - RING	212	2040400-05110-0	SPRING PIN	427	11323-1264701-1	POSITIONING SHEET
104	2040104-04010-0	HEX.SOC.HD.SCREW	213	2040400-05160-0	SPRING PIN	428	2040500-02010-0	LOCK NUT
105	2040100-03220-0	BOLT W/FLAT WASHER	214	11376-0154701-1	SPRING	429	2040501-03040-0	BOLT CAP
106	11369-1094301-1	CAP	215	11224-0461101-1	TRIGGER UNIT	430	2040101-03100-0	HEX.SOC.HD.BOLT
108	1132M-1094701-1	PACKING	301	11230-1096601-1	GUN BODY UNIT	431	2040202-03010-0	FLAT WASHER
109	11360-1090001-1	COMPRESSION SPRING	302	11346-0084303-1	END CAP	432	11396-1260003-1	STEEL CHANNEL C
110	2041108-05070-0	O.- RING	303	2041109-05050-0	O - RING			
111	11368-1090001-1	HD.VALVE PISTON	401	2041109-01060-0	O - RING			
112	2041109-06010-0	O - RING	402	2041104-05020-0	O - RING			
113	11370-1090001-1	SEAL	403	11382-1264701-1	NOSE PIECE			
114	11399-1090001-1	COLLAR	404	1135T-1264701-1	GUIDE BULB			
115	1136D-0984701-1	PRESS RING	405	2040101-04090-2	HEX.SOC.HD.BOLT			
116	1131E-0084701-2	CYLINDER PRESS RING	406	2040101-03080-2	HEX.SOC.HD.BOLT			
117	2041107-05010-0	O-RING	407	11398-1264701-1	SAFETY LATCH SPRING BUSHING			
118	11204-1260001-1	DRIVER UNIT	408	11330-1264701-1	SAFETY			
119	2041109-06020-0	O - RING	409	11338-1074702-1	SAFETY GUIDE			
120	11320-1090001-1	CYLINDER	410	11337-0254701-1	SAFETY SPRING			
121	11322-0764701-1	CYLINDER RING	411	11389-1264701-1	MAGAZINE A			
122	11321-0080006-1	CYLINDER SPACER	412	11396-1260001-1	STEEL CHANNEL			
123	2041104-08010-0	O - RING	413	11396-1260002-1	STEEL CHANNEL			
124	11327-0764702-1	BUMPER	414	2040101-03050-0	HEX.SOC.HD.BOLT			
125	11397-1264701-1	GUIDE COVER	415	11380-1094701-1	GASKET			
201	11374-0084701-1	PLUNGER CAP	416	11278-1264701-1	SPRING UNIT			
202	2041104-02020-0	O - RING	417	11386-1260001-1	ROLLING ELEMENT			
203	2041104-02030-0	O - RING	418	2040400-07090-0	SPRING PIN			
204	1133S-0780002-1	VALVE PLUNGER	419	2040400-07140-0	SPRING PIN			
205	2041100-01070-0	O - RING	420	11363-1264701-1	PUSHER			
206	2041100-01030-0	O - RING	421	1136E-1264701-1	PROTECTING HOOD COVER			
207	11376-0780001-1	SPRING	422	11337-0984701-1	SAFETY SPRING			
208	11375-0780002-1	PLUNGER	423	11398-1264702-1	LATCH SPRING BUSHING			
209	2041108-01030-0	O - RING	424	1138L-1264701-1	LOCK WASHER			