DIAGRAM OF RP207-C1

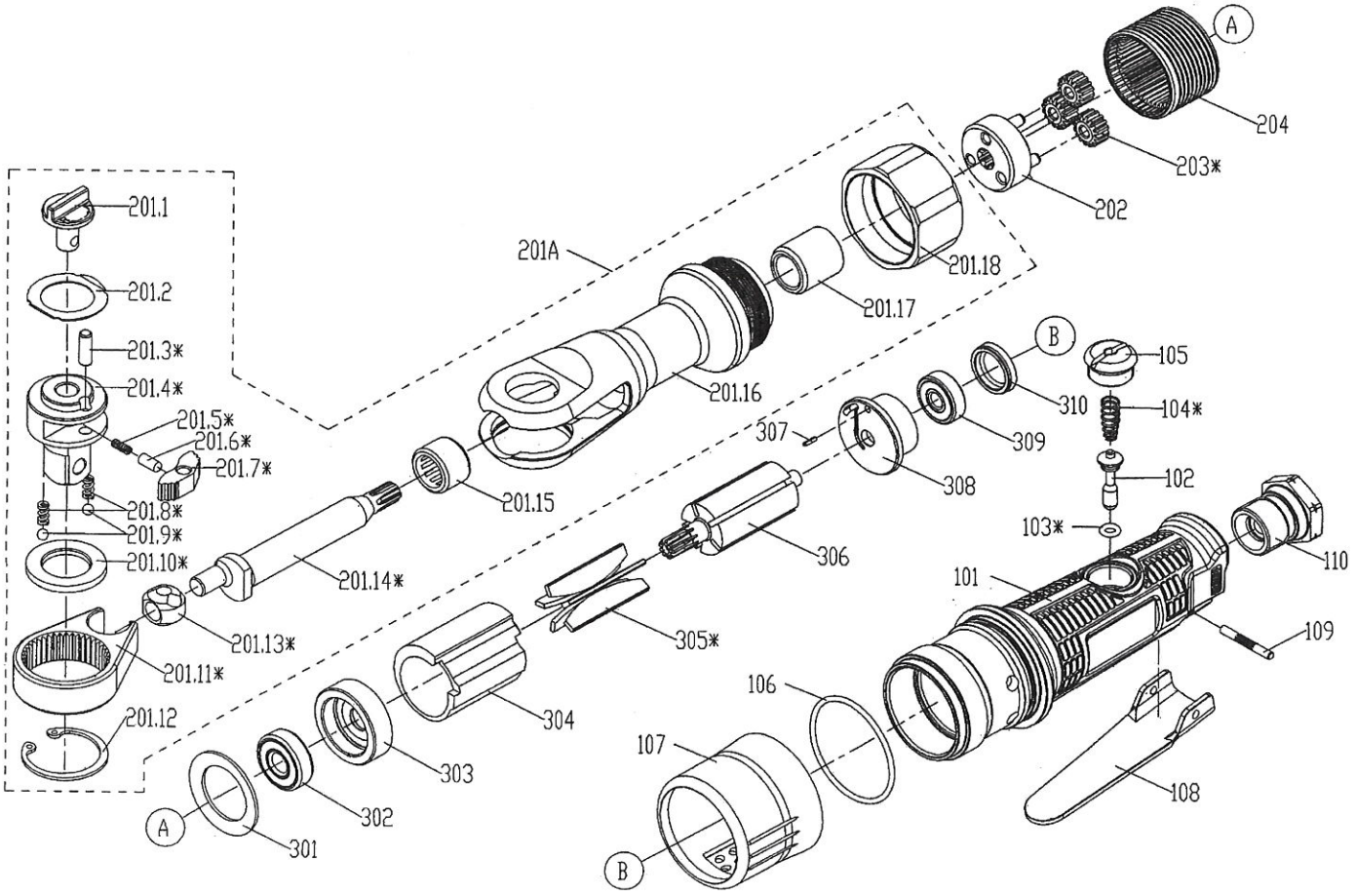

ITEM NO.	PART NO.	DESCRIPTION	ITEM NO.	PART NO.	DESCRIPTION	ITEM NO.	PART NO.	DESCRIPTION
101	12302-1000009-1	HOUSING						
102	12305-1004701-1	VALVE STEM						
103	2041100-01040-0	O - RING						
104	1230J-1000006-1	VALVE STEM SPRING						
105	12397-1004701-1	DISCHARGE VALVE SEAL						
106	2041102-04050-0	O - RING						
107	12352-1004701-1	OUTLET CONTROLLER						
108	12310-1000001-1	TRIGGER						
109	1236D-1004701-1	PIN						
110	12309-0074729-1	AIR INLET						
201A	12242-1004702-1	RATCHET HOUSING UNIT						
202	12241-1000002-1	PLAENT CAGE ASSY						
203	1231B-1000001-1	PLANET GEAR						
204	1231A-1004701-1	INTERNAL GEAR						
301	1230J-1004701-1	LOCK WASHER						
302	2041200-00021-0	BEARING						
303	12312-1000001-1	FRONT PLATE						
304	12315-1000003-1	CYLINDER						
305	12314-1000001-1	BLADE						
306	12313-1000001-1	ROTOR						
307	2040400-02030-0	SPRING PIN						
308	12316-1000001-1	REAL PLATE						
309	2041200-00013-0	BEARING						
310	1230X-1004701-1	HOUSING COVER						